SECTION DLK
DOOR & LOCK

CONTENTS

BASIC INSPECTION 7

DIAGNOSIS AND REPAIR WORK FLOW 7
Work Flow 7

INSPECTION AND ADJUSTMENT 10

ADDITIONAL SERVICE WHEN REPLACING CONTROL UNIT 10
ADDITIONAL SERVICE WHEN REPLACING CONTROL UNIT : Description 10
ADDITIONAL SERVICE WHEN REPLACING CONTROL UNIT : Special Repair Requirement 10

SYSTEM DESCRIPTION 11

POWER DOOR LOCK SYSTEM 11
System Diagram 11
System Description 11
Component Parts Location 13
Component Description 14

INTELLIGENT KEY SYSTEM 15

INTELLIGENT KEY SYSTEM 15
INTELLIGENT KEY SYSTEM : System Diagram....15
INTELLIGENT KEY SYSTEM : System Description 15
INTELLIGENT KEY SYSTEM : Component Parts Location 17
INTELLIGENT KEY SYSTEM : Component Description 18

DOOR LOCK FUNCTION 19
DOOR LOCK FUNCTION : System Diagram 19
DOOR LOCK FUNCTION : System Description 19
DOOR LOCK FUNCTION : Component Parts Location 22
DOOR LOCK FUNCTION : Component Description 23

TRUNK OPEN FUNCTION 24
TRUNK OPEN FUNCTION : System Diagram 24
TRUNK OPEN FUNCTION : System Description....24
TRUNK OPEN FUNCTION : Component Parts Location 26
TRUNK OPEN FUNCTION : Component Description 27

REMOTE KEYLESS ENTRY FUNCTION 28
REMOTE KEYLESS ENTRY FUNCTION : System Diagram 28
REMOTE KEYLESS ENTRY FUNCTION : System Description 28
REMOTE KEYLESS ENTRY FUNCTION : Component Parts Location 32
REMOTE KEYLESS ENTRY FUNCTION : Component Description 33

KEY REMINDER FUNCTION 34
KEY REMINDER FUNCTION : System Diagram....34
KEY REMINDER FUNCTION : System Description 34
KEY REMINDER FUNCTION : Component Parts Location 35

WARNING FUNCTION 36
WARNING FUNCTION : System Description 36
WARNING FUNCTION : Component Parts Location 41

TRUNK OPEN FUNCTION 43
System Diagram 43
System Description 43
Component Parts Location 44
Component Description 44

INTEGRATED HOMELINK TRANSMITTER 45
Component Description 45

DIAGNOSIS SYSTEM (BCM) 46

COMMON ITEM 46
COMMON ITEM : CONSULT Function (BCM - COMMON ITEM) 46

DOOR LOCK 47
DOOR LOCK : CONSULT Function (BCM - DOOR LOCK) 47

INTELLIGENT KEY 49
INTELLIGENT KEY : CONSULT Function (BCM - INTELLIGENT KEY) 49

TRUNK 52
TRUNK : CONSULT Function (BCM - TRUNK) 52

DTC/CIRCUIT DIAGNOSIS 53

U1000 CAN COMM CIRCUIT 53
Description 53
DTC Logic 53
Diagnosis Procedure 53

U1010 CONTROL UNIT (CAN) 54
DTC Logic 54
Diagnosis Procedure 54
Special Repair Requirement 54

B2621 INSIDE ANTENNA 55
Description 55
DTC Logic 55
Diagnosis Procedure 55

B2622 INSIDE ANTENNA 57
Description 57
DTC Logic 57
Diagnosis Procedure 57

B2623 INSIDE ANTENNA 59
Description 59
DTC Logic 59
Diagnosis Procedure 59

POWER SUPPLY AND GROUND CIRCUIT 61

BCM (BODY CONTROL MODULE) 61
BCM (BODY CONTROL MODULE) : Diagnosis Procedure 61

DOOR SWITCH 62
Description 62
Component Function Check 62
Diagnosis Procedure 62
Component Inspection 63

DOOR LOCK AND UNLOCK SWITCH 64

DRIVER SIDE 64
DRIVER SIDE : Description 64
DRIVER SIDE : Component Function Check 64
DRIVER SIDE : Diagnosis Procedure 64

PASSENGER SIDE 64
PASSENGER SIDE : Description 64
PASSENGER SIDE : Component Function Check 64
PASSENGER SIDE : Diagnosis Procedure 64

DOOR LOCK ACTUATOR 66

DRIVER SIDE 66
DRIVER SIDE : Description 66
DRIVER SIDE : Component Function Check 66
DRIVER SIDE : Diagnosis Procedure 66

PASSENGER SIDE 66
PASSENGER SIDE : Description 67
PASSENGER SIDE : Component Function Check 67
PASSENGER SIDE : Diagnosis Procedure 67

FUEL LID LOCK ACTUATOR 68
Description 68
Component Function Check 68
Diagnosis Procedure 68

TRUNK LID OPENER ACTUATOR 69
Description 69
Component Function Check 69
Diagnosis Procedure 69

TRUNK ROOM LAMP SWITCH 71
Description 71
Component Function Check 71
Diagnosis Procedure 71
Component Inspection 72

DOOR KEY CYLINDER SWITCH 73
Description 73
Component Function Check 73
Diagnosis Procedure 73
Component Inspection 74

REMOTE KEYLESS ENTRY RECEIVER 75
Description 75
Component Function Check 75
Diagnosis Procedure 75

TRUNK LID OPENER SWITCH 78
Description 78
Component Function Check 78
Diagnosis Procedure 78
Component Inspection 79

TRUNK LID OPENER REQUEST SWITCH 80
Description 80
Component Function Check 80
Diagnosis Procedure 80
Component Inspection 81

TRUNK LID OPENER CANCEL SWITCH 82
Description 82
Component Function Check 82
Diagnosis Procedure 82
Component Inspection 83

DOOR REQUEST SWITCH 84
Description 84
Component Function Check 84
Diagnosis Procedure 84

Component Inspection 85

UNLOCK SENSOR 86
Description 86
Component Function Check 86
Diagnosis Procedure 86
Component Inspection 87

OUTSIDE KEY ANTENNA 88
Description 88
Component Function Check 88
Diagnosis Procedure 88

INTELLIGENT KEY WARNING BUZZER 91
Description 91
Component Function Check 91
Diagnosis Procedure 91
Component Inspection 92

INTELLIGENT KEY 93
Description 93
Component Function Check 93
Diagnosis Procedure 93
Component Inspection 93
Special Repair Requirement 94

KEY SLOT 95
Description 95
Component Function Check 95
Diagnosis Procedure 95
Component Inspection 96

KEY SLOT INDICATOR 97
Description 97
Component Function Check 97
Diagnosis Procedure 97
Component Inspection 98

HORN FUNCTION 99
Description 99
Component Function Check 99
Diagnosis Procedure 99

COMBINATION METER DISPLAY FUNCTION 101
Description 101
Component Function Check 101
Diagnosis Procedure 101

BUZZER (COMBINATION METER) 102
Description 102
Component Function Check 102
Diagnosis Procedure 102

KEY WARNING LAMP 103
Description 103
Component Function Check 103
Diagnosis Procedure 103

HAZARD FUNCTION 104
Description 104
Component Function Check 104
Diagnosis Procedure 104

INTEGRATED HOMELINK TRANSMITTER .. 105
Description 105
Component Function Check 105
Diagnosis Procedure 105

POWER DOOR LOCK SYSTEM 107
Wiring Diagram - POWER DOOR LOCK SYSTEM - 107

INTELLIGENT KEY SYSTEM 108
Wiring Diagram - INTELLIGENT KEY SYSTEM -.. 108

TRUNK LID OPENER 111
Wiring Diagram - TRUNK LID OPENER - 111

INTEGRATED HOMELINK TRANSMITTER SYSTEM 112
Wiring Diagram - INTEGRATED HOMELINK TRANSMITTER SYSTEM - 112

ECU DIAGNOSIS INFORMATION 113

BCM (BODY CONTROL MODULE) 113
Reference Value 113
Wiring Diagram - BCM - 136
Fail-safe 139
DTC Inspection Priority Chart 140
DTC Index 141

SYMPTOM DIAGNOSIS 144

DOOR DOES NOT LOCK/UNLOCK WITH DOOR LOCK AND UNLOCK SWITCH 144

ALL DOOR 144
ALL DOOR : Description 144
ALL DOOR : Diagnosis Procedure 144

DRIVER SIDE 144
DRIVER SIDE : Description 144
DRIVER SIDE : Diagnosis Procedure 144

PASSENGER SIDE 145
PASSENGER SIDE : Description 145
PASSENGER SIDE : Diagnosis Procedure 145

DOOR DOES NOT LOCK/UNLOCK WITH DOOR KEY CYLINDER OPERATION 146
Description 146
Diagnosis Procedure 146

DOOR DOES NOT LOCK/UNLOCK WITH DOOR REQUEST SWITCH 147

ALL DOOR 147
ALL DOOR : Description 147
ALL DOOR : Diagnosis Procedure 147

DRIVER SIDE 147
DRIVER SIDE : Description 147

DRIVER SIDE : Diagnosis Procedure 147

PASSENGER SIDE 148
PASSENGER SIDE : Description 148
PASSENGER SIDE : Diagnosis Procedure 148

DOOR DOES NOT LOCK/UNLOCK WITH INTELLIGENT KEY 149
Description 149
Diagnosis Procedure 149

TRUNK LID DOES NOT OPEN WITH TRUNK LID OPENER SWITCH 150
Description 150
Diagnosis Procedure 150

TRUNK LID DOES NOT OPEN WITH INTELLIGENT KEY 151
Description 151
Diagnosis Procedure 151

TRUNK LID DOES NOT OPEN WITH TRUNK LID OPENER REQUEST SWITCH 152
Description 152
Diagnosis Procedure 152

SELECTIVE UNLOCK FUNCTION DOES NOT OPERATE 153

DOOR REQUEST SWITCH 153
DOOR REQUEST SWITCH : Description 153
DOOR REQUEST SWITCH : Diagnosis Procedure 153

INTELLIGENT KEY 153
INTELLIGENT KEY : Description 153
INTELLIGENT KEY : Diagnosis Procedure 153

DOOR KEY CYLINDER 154
DOOR KEY CYLINDER : Description 154
DOOR KEY CYLINDER : Diagnosis Procedure ...154

VEHICLE SPEED SENSING AUTO LOCK OPERATION DOES NOT OPERATE 155
Description 155
Diagnosis Procedure 155

IGN OFF INTERLOCK DOOR UNLOCK FUNCTION DOES NOT OPERATE 156
Description 156
Diagnosis Procedure 156

P RANGE INTERLOCK DOOR LOCK/UNLOCK FUNCTION DOES NOT OPERATE 157
Description 157
Diagnosis Procedure 157

AUTO DOOR LOCK OPERATION DOES NOT OPERATE 158
Description 158
Diagnosis Procedure 158

FUEL LID LOCK ACTUATOR DOES NOT OPERATE 159
Description 159
Diagnosis Procedure 159

PANIC ALARM FUNCTION DOES NOT OPERATE 160
Description 160
Diagnosis Procedure 160

HAZARD AND HORN REMINDER DOES NOT OPERATE 161
Description 161
Diagnosis Procedure 161

HAZARD AND BUZZER REMINDER DOES NOT OPERATE 162
Description 162
Diagnosis Procedure 162

KEY REMINDER FUNCTION DOES NOT OPERATE 163

INTELLIGENT KEY SYSTEM 163
INTELLIGENT KEY SYSTEM : Description 163
INTELLIGENT KEY SYSTEM : Diagnosis Procedure 163

POWER DOOR LOCK SYSTEM 163
POWER DOOR LOCK SYSTEM : Description 164
POWER DOOR LOCK SYSTEM : Diagnosis Procedure 164

KEY WARNING DOES NOT OPERATE 165
Description 165
Diagnosis Procedure 165

OFF POSITION WARNING DOES NOT OPERATE 166
Description 166
Diagnosis Procedure 166

P POSITION WARNING DOES NOT OPERATE 167
Description 167
Diagnosis Procedure 167

ACC WARNING DOES NOT OPERATE 169
Description 169
Diagnosis Procedure 169

TAKE AWAY WARNING DOES NOT OPERATE 170
Description 170
Diagnosis Procedure 170

INTELLIGENT KEY LOW BATTERY WARNING DOES NOT OPERATE 172
Description 172
Diagnosis Procedure 172

DOOR LOCK OPERATION WARNING DOES NOT OPERATE **173**
Description 173
Diagnosis Procedure 173

KEY ID WARNING DOES NOT OPERATE **174**
Description 174
Diagnosis Procedure 174

KEY WARNING LAMP DOES NOT ILLUMINATE **175**
Description 175
Diagnosis Procedure 175

INTEGRATED HOMELINK TRANSMITTER DOES NOT OPERATE **176**
Diagnosis Procedure 176

SQUEAK AND RATTLE TROUBLE DIAGNOSES **177**
Work Flow 177
Inspection Procedure 179
Diagnostic Worksheet 181

PRECAUTION **183**

PRECAUTIONS **183**
Precaution for Supplemental Restraint System (SRS) "AIR BAG" and "SEAT BELT PRE-TENSIONER" 183
Precaution for Battery Service 183
Precaution for Procedure without Cowl Top Cover. 183
Precautions For Xenon Headlamp Service 183
Work 184

PREPARATION **185**

PREPARATION **185**
Special Service Tools 185
Commercial Service Tools 185

REMOVAL AND INSTALLATION **186**

HOOD **186**

HOOD ASSEMBLY **186**
HOOD ASSEMBLY : Exploded View 186
HOOD ASSEMBLY : Removal and Installation 186
HOOD ASSEMBLY : Adjustment 187
HOOD ASSEMBLY : Disposal 188

HOOD LOCK CONTROL **189**
HOOD LOCK CONTROL : Exploded View 189
HOOD LOCK CONTROL : Removal and Installation 189
HOOD LOCK CONTROL : Inspection 191

RADIATOR CORE SUPPORT **192**
Exploded View 192
Removal and Installation 192

FRONT FENDER **195**
Exploded View 195
Removal and Installation 195

DOOR **196**

DOOR ASSEMBLY **196**
DOOR ASSEMBLY : Exploded View 196
DOOR ASSEMBLY : Removal and Installation 196
DOOR ASSEMBLY : Adjustment 196

DOOR STRIKER **198**
DOOR STRIKER : Exploded View 198
DOOR STRIKER : Removal and Installation 198

DOOR HINGE **198**
DOOR HINGE : Exploded View 199
DOOR HINGE : Removal and Installation 199

DOOR CHECK LINK **199**
DOOR CHECK LINK : Exploded View 200
DOOR CHECK LINK : Removal and Installation 200

TRUNK LID **201**

TRUNK LID ASSEMBLY **201**
TRUNK LID ASSEMBLY : Exploded View 201
TRUNK LID ASSEMBLY : Removal and Installation 201
TRUNK LID ASSEMBLY : Adjustment 202

TRUNK LID STRIKER **203**
TRUNK LID STRIKER : Exploded View 203
TRUNK LID STRIKER : Removal and Installation. 204

TRUNK LID HINGE **204**
TRUNK LID HINGE : Exploded View 204
TRUNK LID HINGE : Removal and Installation 204

TRUNK LID STAY **205**
TRUNK LID STAY : Exploded View 205
TRUNK LID STAY : Removal and Installation 205
TRUNK LID STAY : Disposal 206

TRUNK LID WEATHERSTRIP **206**
TRUNK LID WEATHERSTRIP : Exploded View 206
TRUNK LID WEATHERSTRIP : Removal and Installation 206

DOOR LOCK **208**

DOOR LOCK **208**
DOOR LOCK : Exploded View 208
DOOR LOCK : Removal and Installation 208

INSIDE HANDLE **210**
INSIDE HANDLE : Exploded View 211
INSIDE HANDLE : Removal and Installation 211

OUTSIDE HANDLE **211**
OUTSIDE HANDLE : Exploded View 212
OUTSIDE HANDLE : Removal and Installation 212

TRUNK LID LOCK **215**

TRUNK LID LOCK 215
TRUNK LID LOCK : Exploded View 215
TRUNK LID LOCK : Removal and Installation 215

FUEL FILLER LID OPENER 216
Exploded View 216
Removal and Installation 216

DOOR SWITCH 217
Removal and Installation 217

INSIDE KEY ANTENNA 218

INSTRUMENT CENTER 218
INSTRUMENT CENTER : Exploded View 218
INSTRUMENT CENTER : Removal and Installation 218

CONSOLE 218
CONSOLE : Exploded View 218
CONSOLE : Removal and Installation 218

TRUNK ROOM 218
TRUNK ROOM : Exploded View 218
TRUNK ROOM : Removal and Installation 219

OUTSIDE KEY ANTENNA 220

DRIVER SIDE 220
DRIVER SIDE : Exploded View 220
DRIVER SIDE : Removal and Installation 220

PASSENGER SIDE 220
PASSENGER SIDE : Exploded View 220
PASSENGER SIDE : Removal and Installation ... 220

REAR BUMPER 220
REAR BUMPER : Exploded View 220
REAR BUMPER : Removal and Installation 220

INTELLIGENT KEY WARNING BUZZER 221
Exploded View 221
Removal and Installation 221

KEY SLOT 222
Exploded View 222
Removal and Installation 222

TRUNK LID OPENER REQUEST SWITCH 223
Exploded View 223
Removal and Installation 223

TRUNK LID OPENER SWITCH 224
Exploded View 224
Removal and Installation 224

TRUNK LID OPENER CANCEL SWITCH 225
Exploded View 225
Removal and Installation 225

REMOTE KEYLESS ENTRY RECEIVER 226
Exploded View 226
Removal and Installation 226

BASIC INSPECTION

DIAGNOSIS AND REPAIR WORK FLOW

Work Flow

INFOID:0000000008160501

OVERALL SEQUENCE

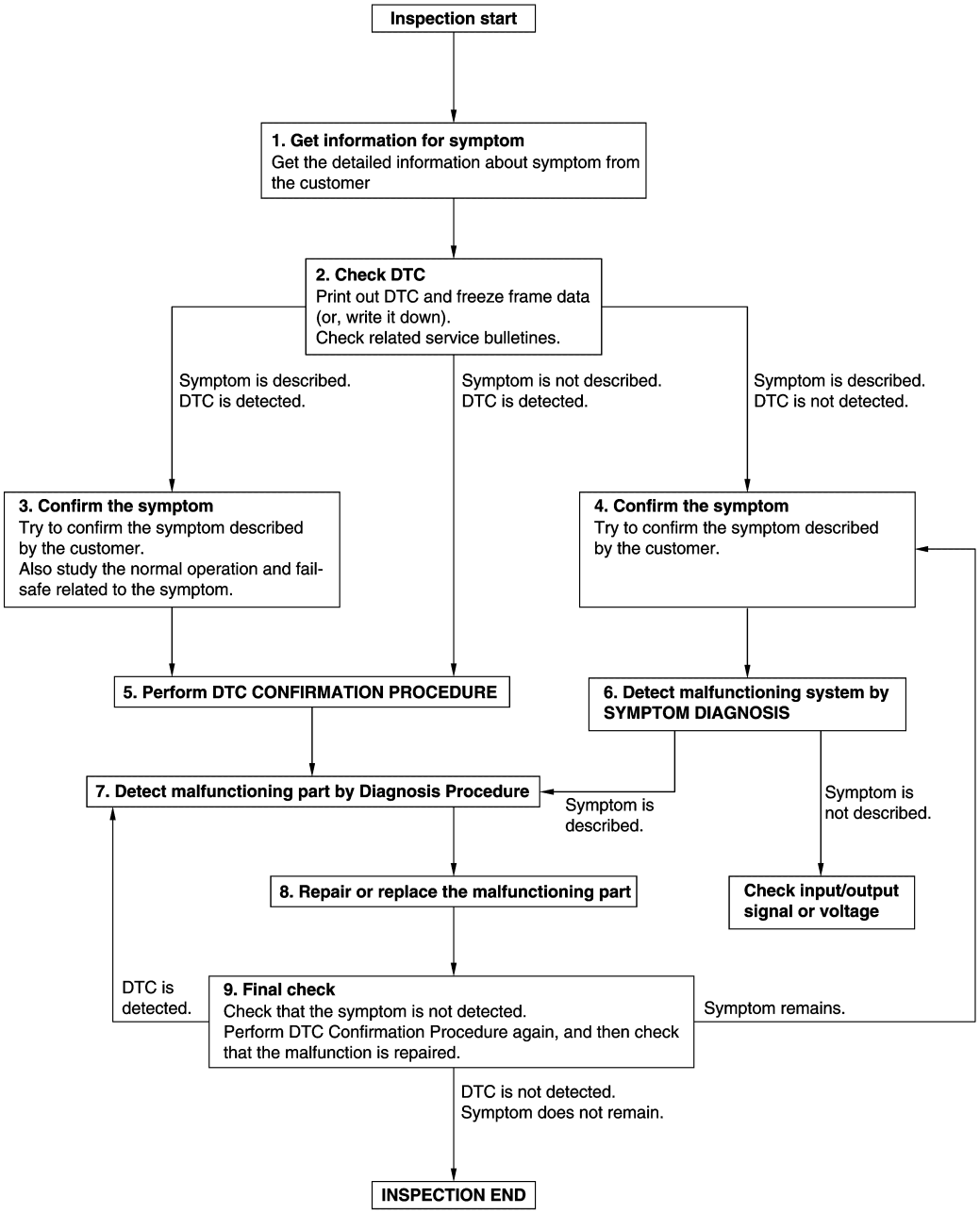

JMKIA8652GB

DETAILED FLOW

1. GET INFORMATION FOR SYMPTOM

1. Get detailed information from the customer about the symptom (the condition and the environment when the incident/malfunction occurred).
2. Check operation condition of the function thai is malfunctioning

>> GO TO 2.

2. CHECK DTC

1. Check DTC.
2. Perform the following procedure if DTC is displayed.
- Record DTC and freeze frame data (print them out with CONSULT).
- Erase DTC.
- Study the relationship between the cause detected by DTC and the symptom described by the customer.
3. Check related service bulletins for information.

Are any symptoms described or any DTC detected?

Symptom is described, DTC is displayed>>GO TO 3.
Symptom is described, DTC is not displayed>>GO TO 4.
Symptom is not described, DTC is displayed>>GO TO 5.

3. CONFIRM THE SYMPTOM

Try to confirm the symptom described by the customer.
Also study the normal operation and fail-safe related to the system.
Verify relation between the symptom and the condition when the symptom is detected.

>> GO TO 5.

4. CONFIRM THE SYMPTOM

Try to confirm the symptom described by the customer.
Verify relation between the symptom and the condition when the symptom is detected.

>> GO TO 6.

5. PERFORM DTC CONFIRMATION PROCEDURE

Perform DTC CONFIRMATION PROCEDURE for the detected DTC, and then check that DTC is detected again.
At this time, always connect CONSULT to the vehicle, and check diagnostic results in real time.
If two or more DTCs are detected, refer to DLK-140, "DTC Inspection Priority Chart" (BCM), and determine trouble diagnosis order.

NOTE:
- Freeze frame data is useful if the DTC is not detected.
- Perform Component Function Check if DTC CONFIRMATION PROCEDURE is not included on Service Manual. This simplified check procedure is an effective alternative though DTC cannot be detected during this check.
  If the result of Component Function Check is NG, it is the same as the detection of DTC by DTC CONFIRMATION PROCEDURE.

Is DTC detected?

YES >> GO TO 7.
NO >> Check according to GI-43, "Intermittent Incident".

6. DETECT MALFUNCTIONING SYSTEM BY SYMPTOM DIAGNOSIS

Detect malfunctioning system according to SYMPTOM DIAGNOSIS based on the confirmed symptom in step 4, and determine the trouble diagnosis order based on possible causes and symptoms.

Is the symptom described?

YES >> GO TO 7.
NO >> Monitor input data from related sensors or check voltage of related module terminals using CONSULT.

7. DETECT MALFUNCTIONING PART BY DIAGNOSIS PROCEDURE

Inspect according to Diagnosis Procedure of the system.

NOTE:

The Diagnostic Procedure described is based on open circuit inspection. A short circuit inspection is also required for the circuit check in the Diagnostic Procedure.

Is malfunctioning part detected?

YES >> GO TO 8.
NO >> Check according to GI-43, "Intermittent Incident".

8. REPAIR OR REPLACE THE MALFUNCTIONING PART

1. Repair or replace the malfunctioning part.
2. Reconnect parts or connectors disconnected during Diagnosis Procedure again after repair and replacement.
3. Check for DTC. If DTC is displayed, erase it.

>> GO TO 9.

9. FINAL CHECK

When DTC is detected in step 2, perform DTC CONFIRMATION PROCEDURE again, and then check that the malfunction is completely repaired.

When symptom is described by the customer, refer to confirmed symptom in step 3 or 4, and check that the symptom is not detected.

Does the symptom reappear?

YES-1 >> DTC is detected: GO TO 7.
YES-2 >> Symptom remains: GO TO 4.
NO >> Before returning the vehicle to the customer, always erase DTC.

INSPECTION AND ADJUSTMENT

ADDITIONAL SERVICE WHEN REPLACING CONTROL UNIT

ADDITIONAL SERVICE WHEN REPLACING CONTROL UNIT : Description

INFOID:0000000008160502

Perform the system initialization when replacing BCM, replacing Intelligent Key or registering an additional Intelligent Key.

ADDITIONAL SERVICE WHEN REPLACING CONTROL UNIT : Special Repair Requirement

INFOID:0000000008160503

Refer to the instruction of CONSULT screen.

SYSTEM DESCRIPTION

POWER DOOR LOCK SYSTEM

System Diagram

INFOID:0000000008160504

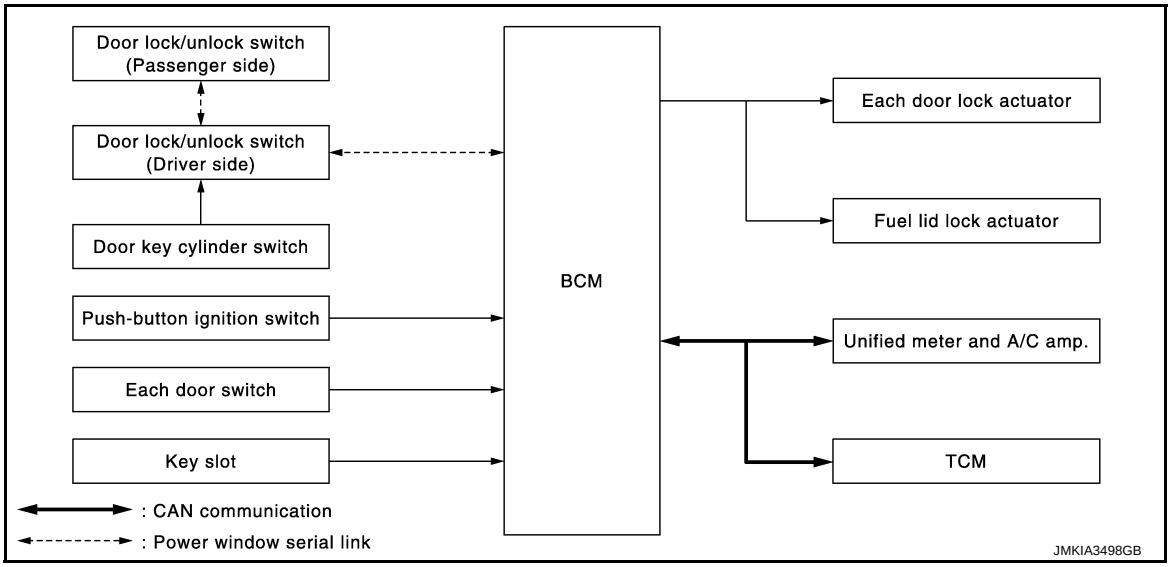

System Description

INFOID:0000000008160505

DOOR LOCK FUNCTION

Door Lock and Unlock Switch

- The door lock and unlock switch (driver side) is build into power window main switch.
- The door lock and unlock switch (passenger side) is build into power window sub-switch.
- Interlocked with the locking operation of door lock and unlock switch, door lock actuators of all doors and fuel lid lock actuator are locked.
- Interlocked with the unlocking operation of door lock and unlock switch, door lock actuators of all doors and fuel lid lock actuator are unlocked.

Door Key Cylinder Switch

- With the door key inserted in the door key cylinder on driver side, turning it to “LOCK”, locks door lock actuator of all doors and fuel lid lock actuator.
- With the door key inserted in the door key cylinder on driver side, turning it to “UNLOCK” once unlocks the driver side door, turning it to “UNLOCK” again within 60 seconds after the first unlock operation unlocks all of the other doors actuator and fuel lid lock actuator. - (SELECTIVE UNLOCK OPERATION)

Selective unlock operation mode can be changed using “DOOR LOCK-UNLOCK SET” mode in “WORK SUPPORT”. Refer to DLK-47, "DOOR LOCK : CONSULT Function (BCM - DOOR LOCK)".

KEY REMINDER FUNCTION

When door lock and unlock switch are operated while Intelligent Key is inserted into key slot and any door is open, door locks once but immediately unlocks. This operation prevents Intelligent Key from being left in the vehicle.

DOOR KEY CYLINDER SWITCH POWER WINDOW FUNCTION

Driver side key cylinder LOCK/UNLOCK operation can activate driver side and passenger side power window UP/DOWN operation. Refer to PWC-7, "System Description".

AUTOMATIC DOOR LOCK/UNLOCK FUNCTION (LOCK OPERATION)

The interlock door lock function is the function that locks all doors linked with the vehicle speed or shift position. It has 2 types as per the following items.

Vehicle Speed Sensing Auto Door Lock*1

All doors are locked when the vehicle speed reaches 24 km/h (15 MPH) or more.

BCM outputs the lock signal to all door lock actuators when it detects that the ignition switch is turned ON, all doors are closed and the vehicle speed received from the combination meter via CAN communication becomes 15 MPH (24 km/h) or more.

P Range Interlock Door Lock*2

All doors are locked when shifting the selector lever from the P position to any position other than P.
BCM outputs the lock signal to all door lock actuators when it detects that the ignition switch is in the ON position and the shift signal received from the TCM via CAN communication is shifted from the P position to any position other than P.

Setting change of Automatic Door Lock/Unlock Function

The lock operation setting of the automatic door lock/unlock function can be changed.

NOTE:

P range interlock door lock can be selected for M/T models, but automatic door lock/unlock function does not operate.

With CONSULT

The ON/OFF switching of the automatic door lock function and the type selection of the automatic door lock/unlock function can be performed at the WORK SUPPORT setting of CONSULT.

Without CONSULT

The automatic door lock function ON/OFF can be switched by performing the following operation.

1. Close all doors (door switch OFF)
2. Turn ignition switch ON
3. Press and hold the door lock and unlock switch for 5 seconds or more in the lock direction within 20 seconds after turning the ignition switch ON.
4. The switching is complete when the hazard lamp blinks.

OFF → ON	: 2 blinks
ON → OFF	: 1 blink

*1: This function is set to ON before delivery.

*2: This function does not operate on M/T models.

AUTOMATIC DOOR LOCK/UNLOCK FUNCTION (UNLOCK OPERATION)

The automatic door lock/unlock function is the function that unlocks all doors linked with the key position or shift position. It has 2 types as per the following items.

IGN OFF Interlock Door Unlock*1

All doors are unlocked when the power supply position is changed from ON to OFF.
BCM outputs the unlock signal to all door lock actuators when it detects that the power supply position is changed from ignition switch ON to OFF.

P Range Interlock Door Unlock*2

All doors are unlocked when shifting the selector lever from any position other than the P to P position.
BCM outputs the unlock signal to all door lock actuators when it detects that the ignition switch is in the ON position and the shift signal received from TCM via CAN communication is shifted from any position other than the P to P position.

Setting change of Automatic Door Lock/Unlock Function

The unlock operation setting of the automatic door lock/unlock function can be changed.

NOTE:

P range interlock door lock can be selected for M/T models, but automatic door lock/unlock function does not operate.

With CONSULT

The ON/OFF switching of the automatic door lock/unlock function and the type selection of the automatic door lock/unlock function can be performed at the WORK SUPPORT setting of CONSULT.

Without CONSULT

The automatic door lock/unlock function ON/OFF can be switched by performing the following operation.

1. Close all doors below (door switch OFF)
2. Turn ignition switch ON

3. Press and hold the door lock and unlock switch for 5 seconds or more in the unlock direction within 20 seconds after turning the ignition switch ON.
4. The switching is complete when the hazard lamp blinks.

OFF → ON	: 2 blinks
ON → OFF	: 1 blink

*1: This function is set to ON before delivery.
*2: This function does not operate on M/T models.

Component Parts Location

INFOID:0000000008160506

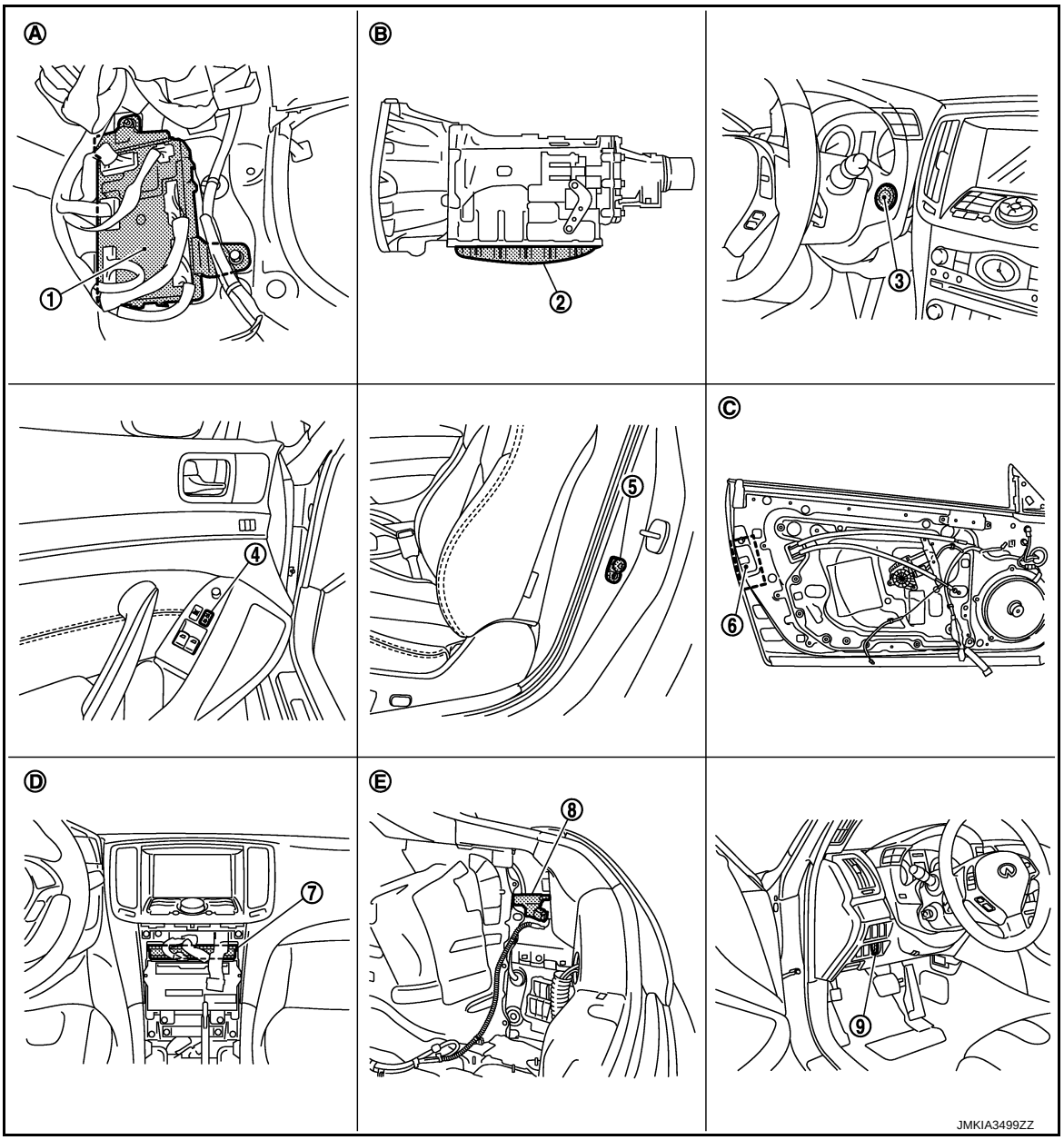

1. BCM M118, M119, M122, M123	2. A/T assembly (TCM)* F51	3. Push-button ignition switch (push switch) M50
4. Power window main switch (door lock and unlock switch) D8	5. Driver side door switch B16	6. Driver side door lock assembly D15
7. Unified meter and A/C amp. M67	8. Fuel lid lock actuator B242	9. Key slot M22

A. Dash side lower (passenger side)
B. A/T assembly (TCM is built in A/T assembly)
C. View with driver side door finisher removed
D. View with cluster lid C removed
E. View with trunk side finisher removed

*:With A/T models

Component Description

INFOID:0000000008160507

Item	Function
BCM	Controls the door lock function.
Door lock and unlock switch	Inputs lock or unlock signal to BCM.
Door lock actuator	Outputs lock/unlock signal from BCM and locks/unlocks each door.
Door key cylinder switch	Built-in driver side door lock assembly • Inputs lock or unlock signal to power window main switch. • Power window main switch transmits door lock/unlock signal to BCM.
Door switch	Inputs door open/close condition to BCM.
Key slot	Inputs key insert/remove signal to BCM.
Unified meter and A/C amp.	Transmits vehicle speed signal to CAN communication line.
TCM	Transmits shift position signal to BCM via CAN communication line.
Fuel lid lock actuator	Performs lock/unlock of the fuel lid.
Push-button ignition switch	Inputs push-button ignition switch ON/OFF condition to BCM.

INTELLIGENT KEY SYSTEM

INTELLIGENT KEY SYSTEM

INTELLIGENT KEY SYSTEM : System Diagram

INFOID:0000000008160508

*1: With A/T models

*2: With M/T models

INTELLIGENT KEY SYSTEM : System Description

INFOID:0000000008160509

- The Intelligent Key system is a system that makes it possible to lock and unlock the door locks (door lock/unlock function) by carrying the Intelligent Key, which operates based on the results of electronic ID verification using two-way communication between the Intelligent Key and the vehicle (BCM).
  CAUTION:
  The driver should always carry the Intelligent Key
- The settings for each function can be changed with CONSULT.
- If an Intelligent Key is lost, a new Intelligent Key can be registered. A maximum of 4 Intelligent Keys can be registered.
- It is possible to perform a diagnosis on the system and register an Intelligent Key with CONSULT.

Function	Description	Refer
Door lock function	Lock/unlock can be performed by pressing the request switch.	DLK-19
Remote keyless entry function	Lock/unlock can be performed by pressing the remote controller button of the Intelligent Key.	DLK-28
Trunk open function	The trunk lid can be opened by carrying the Intelligent Key and pressing the trunk lid opener request switch.	DLK-24
Key reminder function	The key reminder buzzer sounds a warning if the door is locked with the key left inside the vehicle.	DLK-34
Warning function	If an action that does not meet the operating condition of the Intelligent Key system is taken, the buzzer sounds to inform the driver.	DLK-36
Engine start function	The engine can be turned on while carrying the Intelligent Key.	SEC-9

INTELLIGENT KEY SYSTEM : Component Parts Location

INFOID:0000000008160510

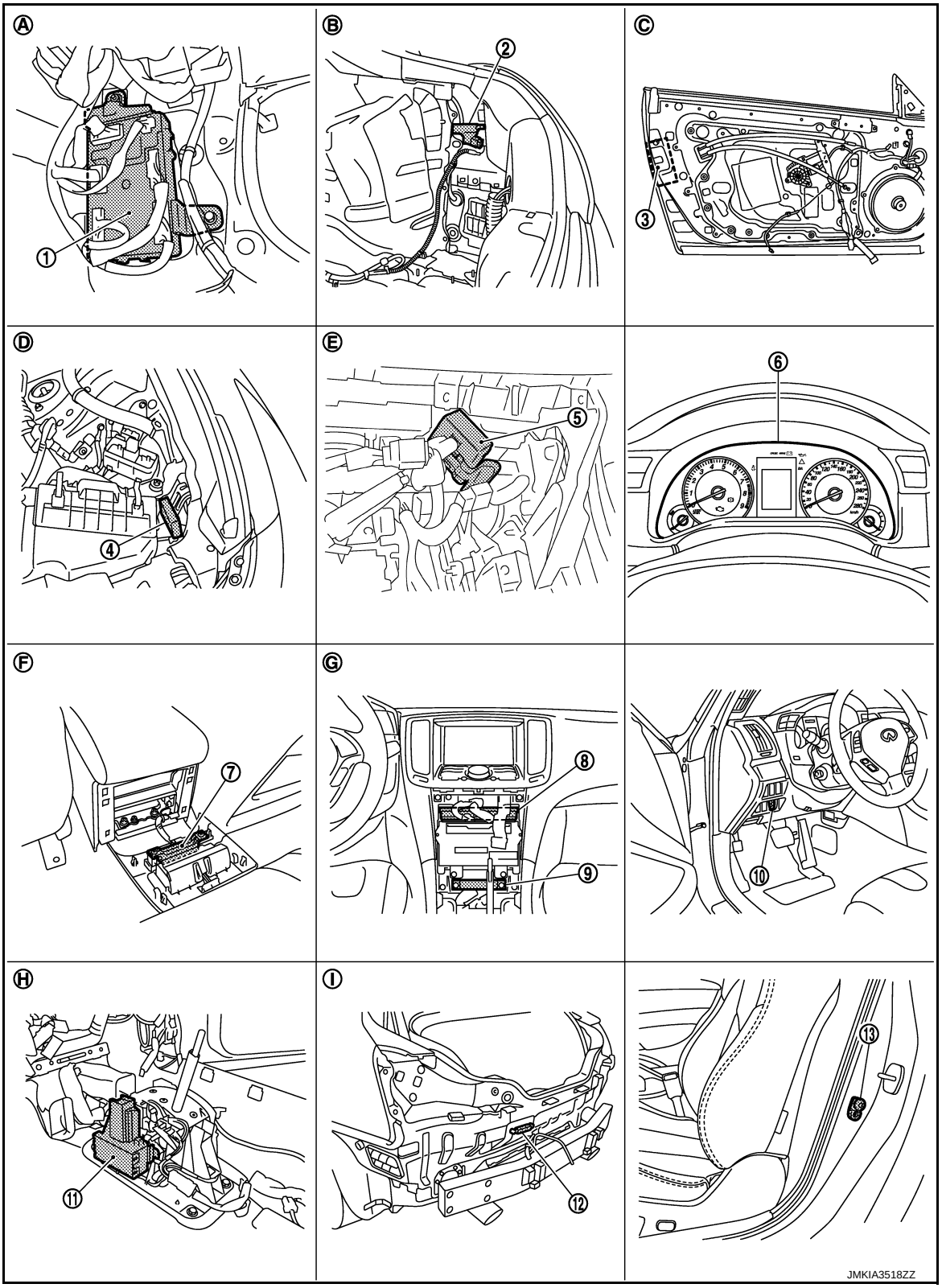

1. BCM M118, M119, M120, M121, M122, M123
2. Fuel lid lock actuator B242
3. Driver side door lock assembly D15
4. Intelligent Key warning buzzer E57
5. Remote keyless entry receiver M104
6. Combination meter M53
7. Inside key antenna (console) M146
8. Unified meter and A/C amp. M66, M67
9. Inside key antenna (instrument center) M131

10. Key slot M22	11. A/T shift selector (detention switch)* M137	12. Outside key antenna (rear bumper) B63
13. Driver side door switch B16		
A. Dash side lower (passenger side)	B. View with trunk side finisher removed	C. View with driver side door finisher removed
D. View with hood seal assembly removed	E. Engine room dash panel	F. View with console rear finisher removed
G. View with cluster lid C removed	H. View with center console assembly removed	I. View with rear bumper removed

*: With A/T models

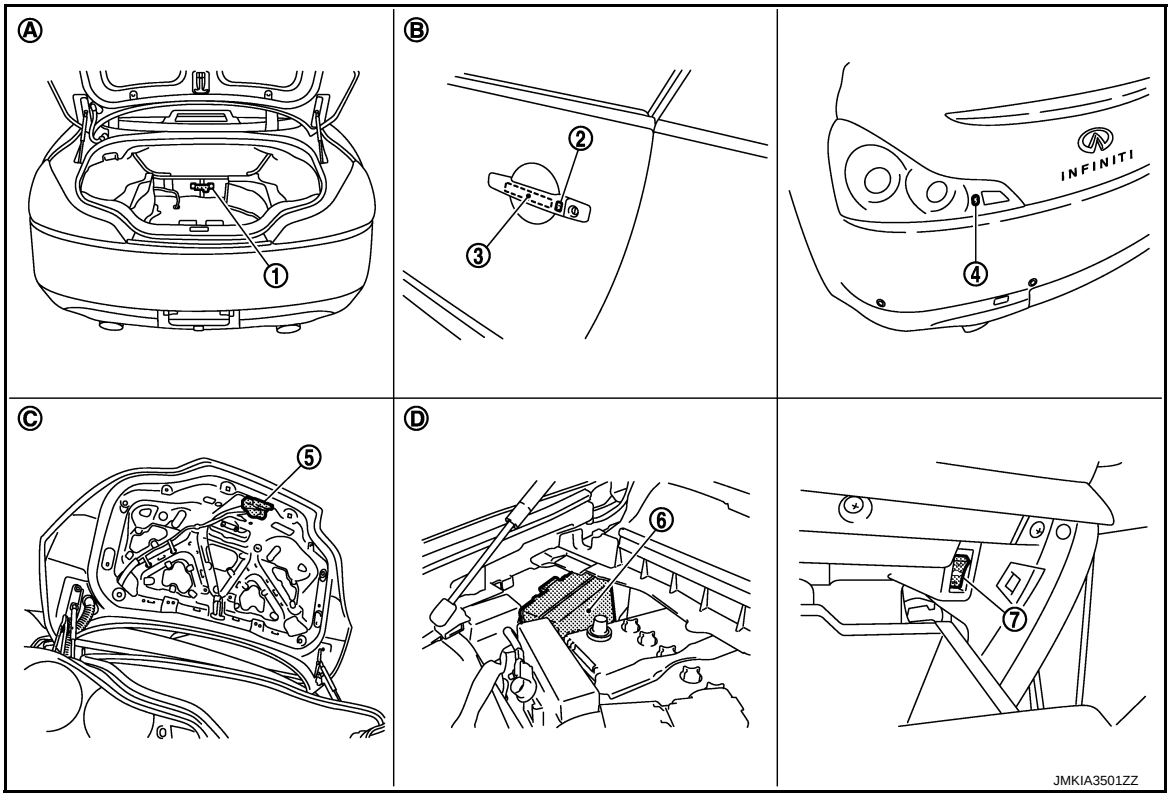

1. Inside key antenna (trunk room) B49	2. Outside handle LH (request switch) D13	3. Outside handle LH (outside key antenna) D14
4. Rear combination lamp LH (trunk lid opener request switch) B60	5. Trunk lid lock assembly B303	6. IPDM E/R E5, E6
7. Trunk lid opener cancel switch M105		
A. View with trunk front finisher removed	B. View with driver side door	C. View with trunk lid finisher removed
D. Engine room dash panel (RH)		

INTELLIGENT KEY SYSTEM : Component Description

INFOID:0000000008160511

Item	Function
BCM	Controls the Intelligent Key system.
IPDM E/R	Sounds horn and blinks head lamp via CAN communication between BCM.
Door lock actuator	Outputs lock/unlock signal from BCM and locks/unlocks each door.
Fuel lid lock actuator	Performs lock/unlock of the fuel lid.
Door switch	Inputs door open/close condition to BCM.
Remote keyless entry receiver	Receives lock/unlock signal from the Intelligent Key, and then transmits to BCM.

Item	Function
Request switch	Inputs lock/unlock operation to BCM.
Key slot	Inputs key insert/remove signal to BCM.
Intelligent Key	Transmits button operation to remote keyless entry receiver.
Outside key antenna	Detects if Intelligent Key is outside the vehicle.
Inside key antenna	Detects if Intelligent Key is inside the vehicle.
Unlock sensor	Detects door lock condition of driver door.
A/T shift selector (detention switch)*	Detects the P range position of A/T selector lever.
Unified meter and A/C amp.	Transmits vehicle seep signal to CAN communication line.
Combination meter	Display, buzzer (combination meter) and KEY warning lamp are installed to combination meter.
Trunk lid opener actuator	Transmits trunk open operation to BCM.
Trunk lid opener request switch	Inputs lock/unlock operation to BCM.
Trunk lid opener cancel switch	Cancels the trunk open operation.
Trunk room lamp switch	Inputs trunk lid open/close condition to BCM.
Intelligent Key warning buzzer	Warns the user of the lock/unlock condition and inappropriate operations with the buzzer sound.
Hazard warning lamp	Warns the user of the door and trunk lid open/close condition and inappropriate operations with the lamps blink.
TCM*	Transmits shift position signal to BCM via CAN communication line.
Push-button ignition switch	Inputs push-button ignition switch ON/OFF condition to BCM.

*: With A/T models

DOOR LOCK FUNCTION

DOOR LOCK FUNCTION : System Diagram

INFOID:0000000008160512

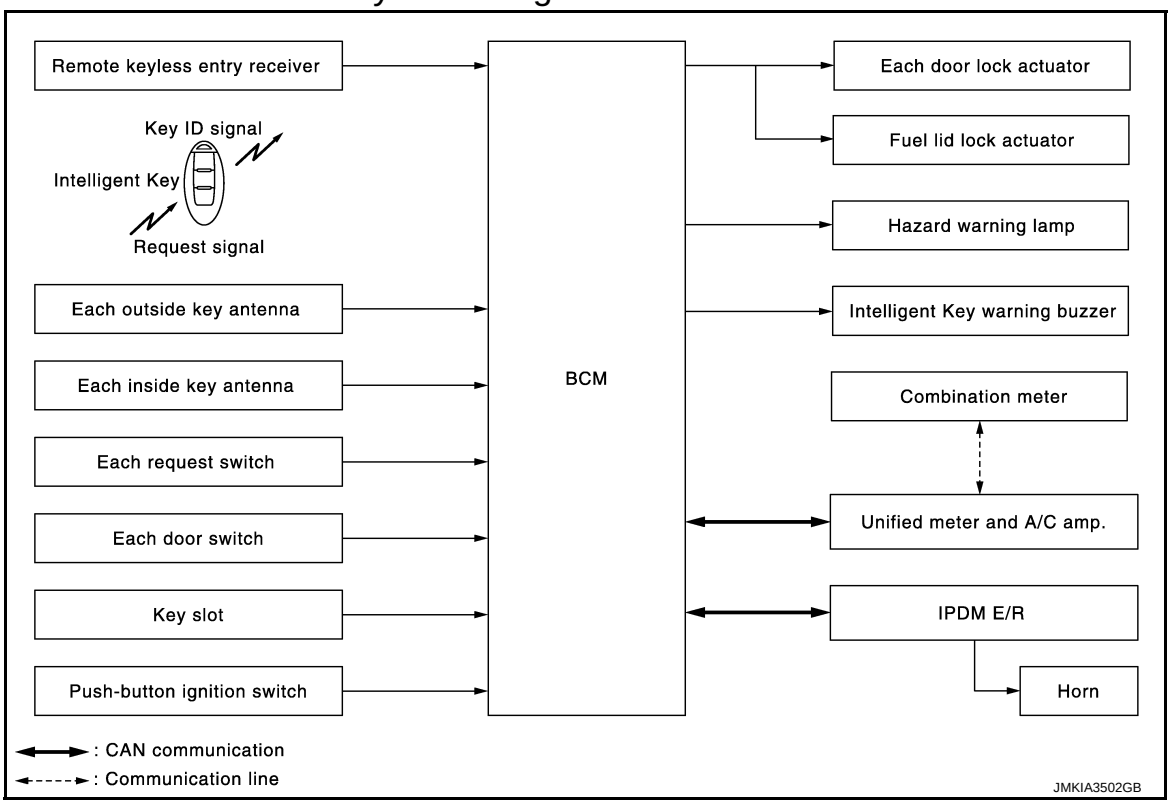

DOOR LOCK FUNCTION : System Description

INFOID:0000000008160513

Only when pressing the request switch, it is possible to lock and unlock the door by carrying the Intelligent Key.

OPERATION DESCRIPTION

- When the BCM detects that each door request switch is pressed, it starts the outside key antenna and inside key antenna corresponding to the pressed door request switch and transmits the request signal to the Intelligent Key. Then check that the Intelligent Key is near the door.
- If the Intelligent Key is within the outside key antenna detection area, it receives the request signal and transmits the key ID signal to the BCM via remote keyless entry receiver.
- BCM receives the key ID signal and compares it with the registered key ID.
- BCM lock/unlock each door and fuel lid and sounds Intelligent Key buzzer warning (lock: 2 times, unlock: 1 time) at the same time as a reminder.

OPERATION CONDITION

If the following conditions are satisfied, door lock/unlock operation is performed if the request switch is operated.

Each request switch operation	Operation condition
Lock operation	• All doors are closed • P position warning is not activated • Panic alarm is not activated • Intelligent Key is outside the vehicle • Intelligent Key is within outside key antenna detection area
Unlock operation	• Panic alarm is not activated • Intelligent Key is outside the vehicle • Intelligent Key is within outside key antenna detection area *

*: Even with a registered Intelligent Key remaining inside the vehicle, door locks can be unlocked from outside of the vehicle with a spare Intelligent Key as long as key IDs are different.

OUTSIDE KEY ANTENNA DETECTION AREA

The outside key antenna detection area of door lock/unlock function is in the range of approximately 80 cm (31.50 in) surrounding the driver, passenger door handles (1). However, this operating range depends on the ambient conditions.

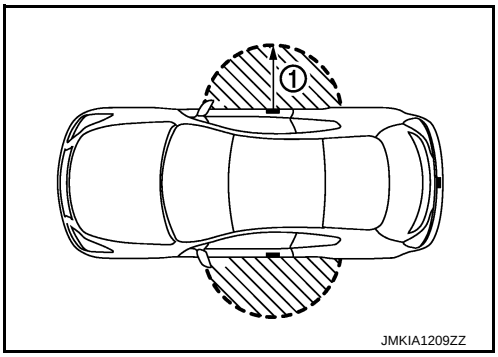

SELECTIVE UNLOCK FUNCTION

Lock Operation

When an LOCK signal is sent from door request switch (driver side or passenger side), all doors and fuel lid are locked.

Unlock Operation

- When an UNLOCK signal from driver side door request switch is transmitted, driver side door and fuel lid unlocks. When another UNLOCK signal is transmitted within 60 seconds, passenger side door unlocks.
- When an UNLOCK signal from passenger side door request switch is transmitted, passenger side door unlock. When another UNLOCK signal is transmitted within 60 seconds, driver side door and fuel lid unlocks.

Selective unlock operation mode can be changed using “DOOR LOCK-UNLOCK SET” mode in “WORK SUPPORT”. Refer to DLK-47, "DOOR LOCK : CONSULT Function (BCM - DOOR LOCK)".

HAZARD AND BUZZER REMINDER FUNCTION

During lock, unlock, operation by each request switch, the hazard warning lamps and Intelligent Key warning buzzer blinks or honk as a reminder.

When doors are locked, unlocked by each request switch, BCM honks Intelligent Key warning buzzer as a reminder and blinks.

Operating Function of Hazard and Buzzer Reminder

Operation	Hazard warning lamp blinks	Intelligent Key warning buzzer honk
Unlock	Once	Once
Lock	Twice	Twice

Hazard and buzzer reminder does not operate if ignition switch ON position.

How to Change Hazard and Buzzer Reminder Mode

Refer to DLK-49, "INTELLIGENT KEY : CONSULT Function (BCM - INTELLIGENT KEY)".

AUTO DOOR LOCK FUNCTION

When all doors are locked, ignition switch is in the OFF position and key switch is OFF (Intelligent Key is not inserted in key slot), doors are unlocked with door request switch

When BCM does not receive the following signals within 60 seconds, all doors and fuel lid are locked.

- Door switch is ON (door is open)
- Door is locked
- Ignition switch is ON (ignition switch is pressed)
- Key switch is ON (Intelligent Key is inserted in key slot)

Auto door lock mode can be changed by the “AUTO LOCK SET” mode in “WORK SUPPORT”. Refer to DLK-49, "INTELLIGENT KEY : CONSULT Function (BCM - INTELLIGENT KEY)".

INTERIOR ROOM LAMP CONTROL

Intelligent Key system turns on interior lamp by receiving UNLOCK signal from door request switch. For detailed description. Refer to INL-6, "System Description".

LIST OF OPERATION RELATED PARTS

Parts marked with × are the parts related to operation.

Door lock function	Intelligent Key	Key slot	Remote keyless entry receiver	Door switch	Door request switch	Door lock actuator and fuel lid lock actuator	Inside key antenna	Outside key antenna	Intelligent Key warning buzzer	CAN communication system	BCM	Hazard warning lamp	Push-button ignition switch	Combination meter
Door lock/unlock function by request switch	×	×	×	×	×	×	×	×			×			
Hazard and buzzer reminder function for door lock/ unlock operation									×	×	×	×		×
Selective unlock function by request switch	×				×	×	×	×			×			
Auto door lock function	×	×		×	×	×					×		×	

DOOR LOCK FUNCTION : Component Parts Location

INFOID:0000000008160514

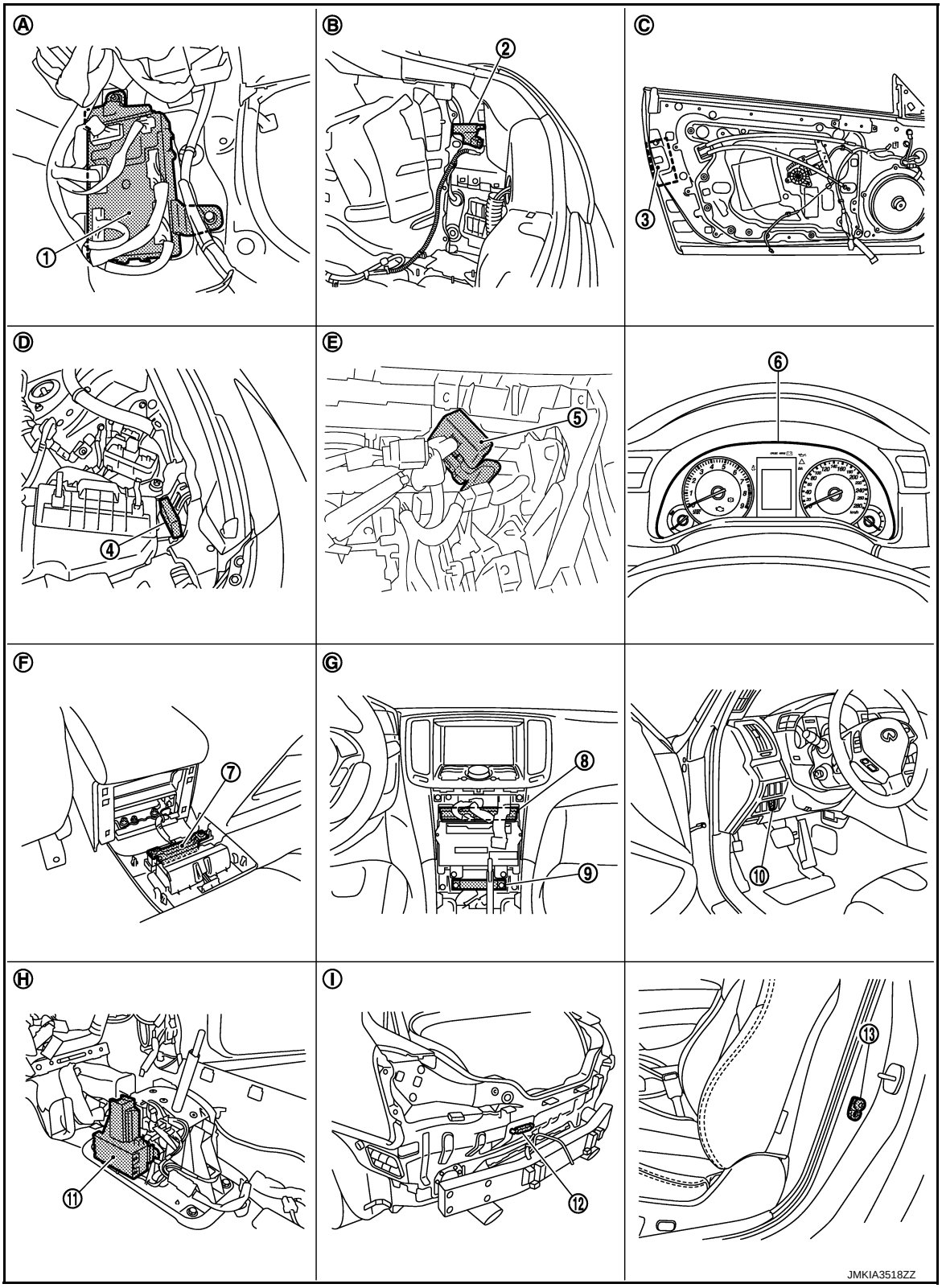

1. BCM M118, M119, M120, M121, M122, M123
2. Fuel lid lock actuator B242
3. Driver side door lock assembly D15
4. Intelligent Key warning buzzer E57
5. Remote keyless entry receiver M104
6. Combination meter M53
7. Inside key antenna (console) M146
8. Unified meter and A/C amp. M66, M67
9. Inside key antenna (instrument center) M131

10. Key slot M22	11. A/T shift selector (detention switch)* M137	12. Outside key antenna (rear bumper) B63
13. Driver side door switch B16		
A. Dash side lower (passenger side)	B. View with trunk side finisher removed	C. View with driver side door finisher removed
D. View with hood seal assembly removed	E. Engine room dash panel	F. View with console rear finisher removed
G. View with cluster lid C removed	H. View with center console assembly removed	I. View with rear bumper removed

*: With A/T models

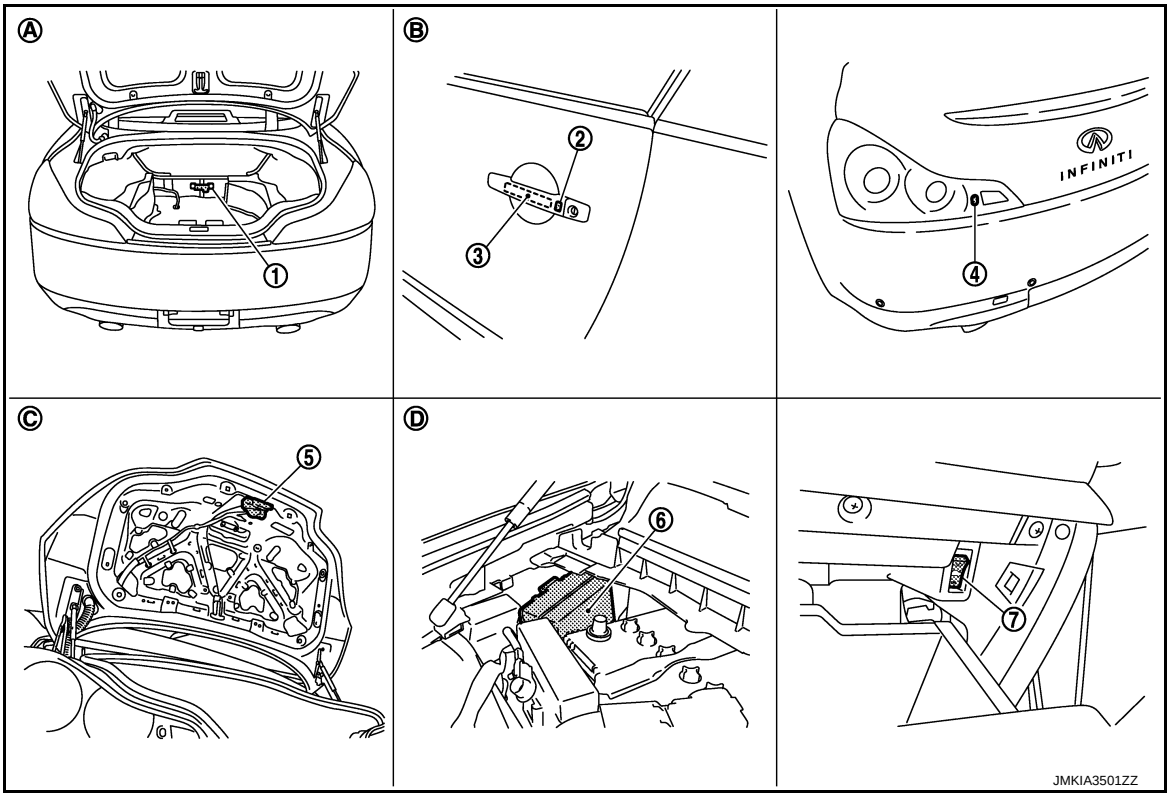

1. Inside key antenna (trunk room) B49	2. Outside handle LH (request switch) D13	3. Outside handle LH (outside key antenna) D14
4. Rear combination lamp LH (trunk lid opener request switch) B60	5. Trunk lid lock assembly B303	6. IPDM E/R E5, E6
7. Trunk lid opener cancel switch M105		
A. View with trunk front finisher removed	B. View with driver side door	C. View with trunk lid finisher removed
D. Engine room dash panel (RH)		

DOOR LOCK FUNCTION : Component Description

INFOID:0000000008160515

Item	Function
BCM	Controls the door lock function.
IPDM E/R	Sounds horn and blinks head lamp via CAN communication between BCM.
Door lock actuator	Outputs lock/unlock signal from BCM and locks/unlocks each door.
Door switch	Inputs door open/close condition to BCM.
Remote keyless entry receiver	Receives lock/unlock signal from the Intelligent Key, and then transmits to BCM.
Request switch	Inputs lock/unlock operation to BCM.

Item	Function
Intelligent Key	Transmits button operation to remote keyless entry receiver.
Outside key antenna	Detects if Intelligent Key is outside the vehicle.
Inside key antenna	Detects if Intelligent Key is inside the vehicle.
Fuel lid lock actuator	Outputs lock/unlock signal from BCM and lock/unlocks fuel filler lid.
Combination meter	Hazard warning lamp is installed to combination meter.
Unified meter and A/C amp.	Transmits hazard warning lamp signal to BCM via CAN communication line.
Push-button ignition switch	Inputs push-button ignition switch ON/OFF condition to BCM.
Key slot	Inputs key insert/remove signal to BCM.
Intelligent Key warning buzzer	Warns the user of the lock/unlock condition and inappropriate operations with the buzzer sound.
Hazard warning lamp	Warns the user of the door lock/unlock condition and in appropriate operations with the lamps blink.

TRUNK OPEN FUNCTION

TRUNK OPEN FUNCTION : System Diagram

INFOID:0000000008160516

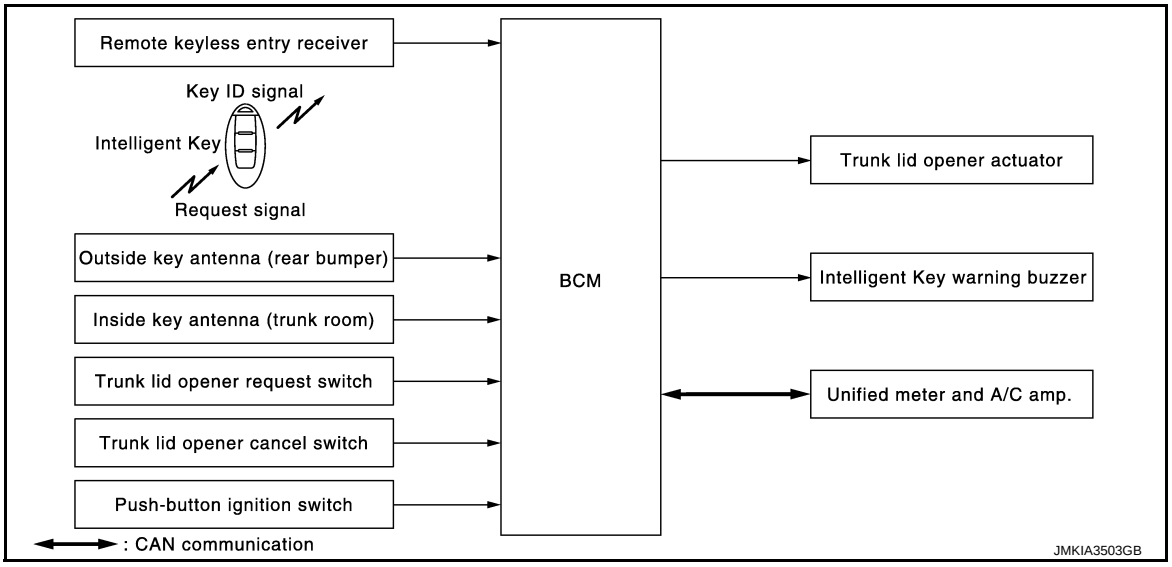

TRUNK OPEN FUNCTION : System Description

INFOID:0000000008160517

TRUNK LID OPENER

- When the BCM detects that trunk lid opener request switch is pressed, it activates the outside key antenna (rear bumper) and inside key antenna and transmits the request signal to the Intelligent Key. And then, checks that the Intelligent Key is near the trunk lid.
- If the Intelligent Key is within the outside key antenna detection area, it receives the request signal and transmits the key ID signal to the BCM via remote keyless entry receiver.
- BCM receives the key ID signal and compares it with the registered key ID.
- BCM transmits the trunk open request signal and sounds Intelligent Key warning buzzer 4 times at the same time (buzzer reminder). However, buzzer reminder does not operate when ignition switch is in the ON position.
- When BCM receives the trunk open request signal, it operates the trunk lid opener actuator and opens the trunk.

How to change buzzer reminder mode

With CONSULT

Refer to DLK-49, "INTELLIGENT KEY : CONSULT Function (BCM - INTELLIGENT KEY)".

OPERATION CONDITION

If the following conditions are not satisfied, trunk open operation is not performed even if the trunk lid opener request switch is operated.

Trunk lid opener request switch operation	Operation condition
Trunk open operation	• Vehicle speed is less than 5 km/h (3 MPH) • Intelligent Key is within outside key antenna (rear bumper) detection area • Trunk cancel switch is ON • Key reminder functions operate (trunk) • Vehicle security system is disarmed or in the per-armed phase.

OUTSIDE KEY ANTENNA DETECTION AREA

The outside key antenna detection area of trunk open function is in the range of approximately 80 cm (31.50 in) surrounding trunk opener request switch (1). However, this operating range depends on the ambient conditions.

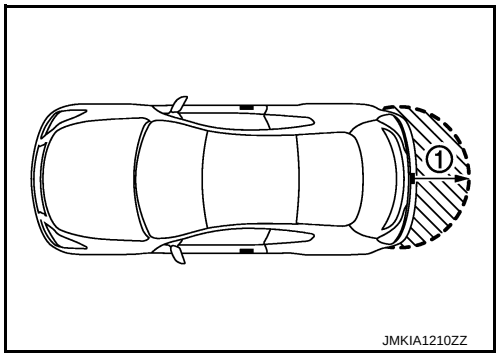

LIST OF OPERATION RELATED PARTS

Parts marked with × are the parts related to operation.

Trunk open function	Intelligent Key	Remote keyless entry receiver	Trunk room lamp switch	Trunk opener request switch	Trunk lid opener actuator	Inside key antenna (trunk)	Outside key antenna (rear bumper)	Intelligent Key warning buzzer	CAN communication system	BCM	Hazard warning lamp	Trunk lid opener cancel switch
Trunk open function by the trunk opener request switch	×	×	×	×	×	×	×		×	×		×
Buzzer reminder for trunk open operation								×	×	×		

TRUNK OPEN FUNCTION : Component Parts Location

INFOID:0000000008160518

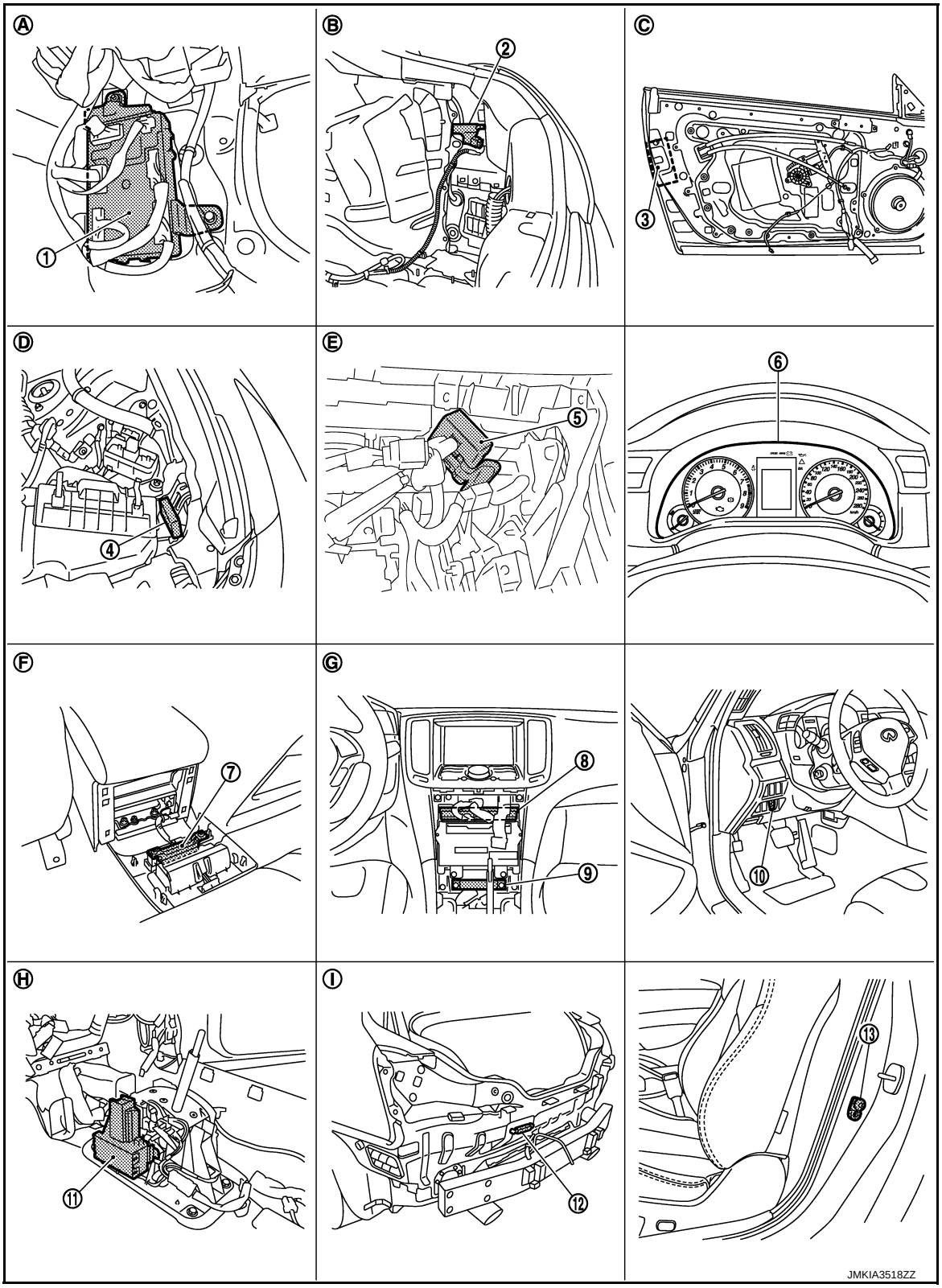

1. BCM M118, M119, M120, M121, M122, M123
2. Fuel lid lock actuator B242
3. Driver side door lock assembly D15
4. Intelligent Key warning buzzer E57
5. Remote keyless entry receiver M104
6. Combination meter M53
7. Inside key antenna (console) M146
8. Unified meter and A/C amp. M66, M67
9. Inside key antenna (instrument center) M131

10. Key slot M22	11. A/T shift selector (detention switch)* M137	12. Outside key antenna (rear bumper) B63
13. Driver side door switch B16		
A. Dash side lower (passenger side)	B. View with trunk side finisher removed	C. View with driver side door finisher removed
D. View with hood seal assembly removed	E. Engine room dash panel	F. View with console rear finisher removed
G. View with cluster lid C removed	H. View with center console assembly removed	I. View with rear bumper removed

*: With A/T models

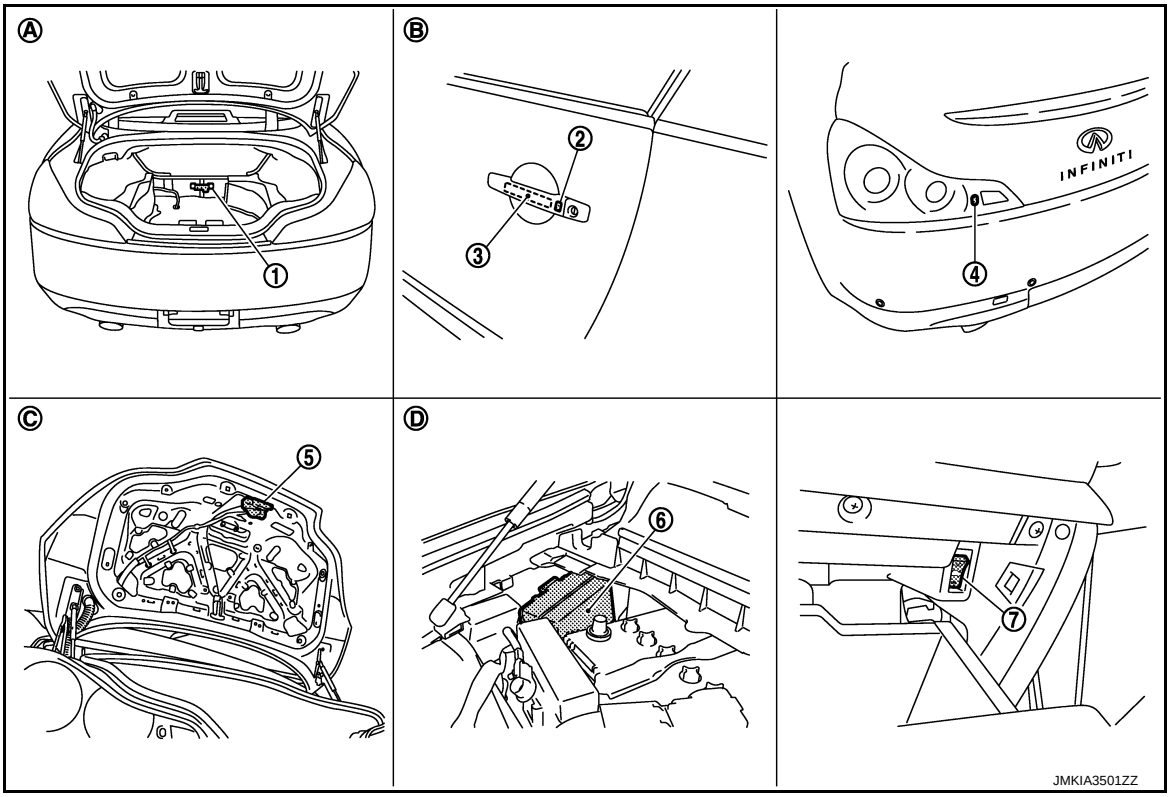

1. Inside key antenna (trunk room) B49	2. Outside handle LH (request switch) D13	3. Outside handle LH (outside key antenna) D14
4. Rear combination lamp LH (trunk lid opener request switch) B60	5. Trunk lid lock assembly B303	6. IPDM E/R E5, E6
7. Trunk lid opener cancel switch M105		
A. View with trunk front finisher removed	B. View with driver side door	C. View with trunk lid finisher removed
D. Engine room dash panel (RH)		

TRUNK OPEN FUNCTION : Component Description

INFOID:0000000008160519

Item	Function
BCM	Controls the trunk open function.
Trunk lid opener actuator	Transmits trunk open operation to BCM.
Unified meter and A/C amp.	Transmits vehicle seep signal to CAN communication line.
Remote keyless entry receiver	Receives lock/unlock signal from the Intelligent Key, and then transmits to BCM.
Trunk lid opener request switch	Inputs lock/unlock operation to BCM.
Intelligent Key	Transmits button operation to remote keyless entry receiver.

Item	Function
Outside key antenna (rear bumper)	Detects if Intelligent Key is outside the vehicle.
Inside key antenna (trunk room)	Detects if Intelligent Key is inside the vehicle.
Trunk lid opener cancel switch	Cancels the trunk open operation.
Intelligent Key warning buzzer	Warns the user of the open condition and inappropriate operations with the buzzer sound.
Push-button ignition switch	Inputs push-button ignition switch ON/OFF condition to BCM.

REMOTE KEYLESS ENTRY FUNCTION

REMOTE KEYLESS ENTRY FUNCTION : System Diagram

INFOID:0000000008160520

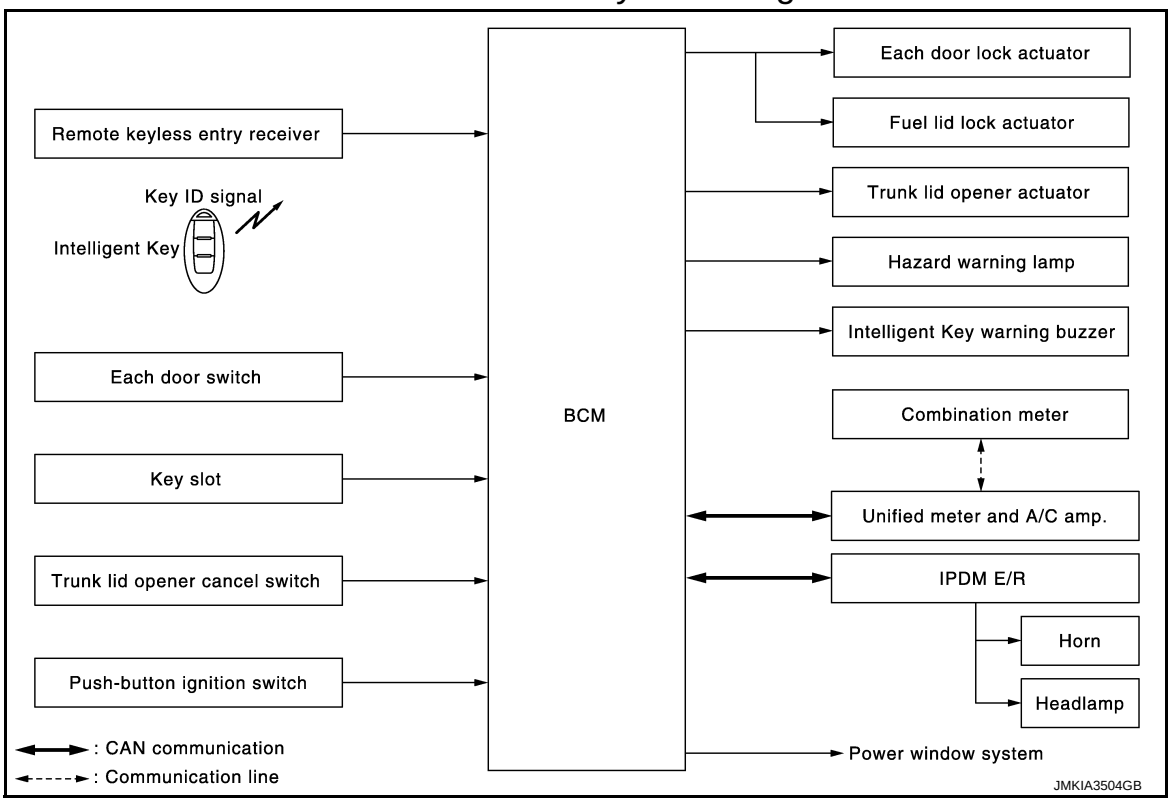

REMOTE KEYLESS ENTRY FUNCTION : System Description

INFOID:0000000008160521

The Intelligent Key has the same functions as the remote control entry system. Therefore, it can be used in the same manner as the remote controller by operating the door lock/unlock button.

OPERATION

Remote keyless entry system controls operation of the following items.

- Door lock/unlock
- Selective unlock
- Trunk lid open
- Hazard and horn reminder
- Auto door lock
- Panic alarm
- Power window down
- Interior lamp

OPERATION AREA

To check that the Intelligent Key works normally, use within 1 m (3 ft) range of each doors, however the operable range may differ according to surroundings.

DOOR LOCK/UNLOCK FUNCTION

- When door lock/unlock button of the Intelligent Key is pressed, lock signal or unlock signal transmitted from Intelligent Key to BCM via remote keyless entry receiver.

- When BCM receives the door lock/unlock signal, it operates all door lock actuators and fuel lid lock actuator the hazard lamp (lock: 2 times, unlock: 1 time) and horn chirp signal to IPDM E/R at the same time as a reminder.
- IPDM E/R honks horn (lock: 2 times) as a reminder

OPERATION CONDITION

Remote controller operation	Operation condition	Operation
Unlock	More than 3 seconds are passed since intelligent Key is removed from key slot.	All doors and fuel lid unlock

SELECTIVE UNLOCK FUNCTION

- When an LOCK signal is transmitted from Intelligent Key, all doors and fuel lid are locked.
- When an UNLOCK signal is transmitted from Intelligent Key once, driver side door and fuel lid are unlocked.
- Then, if an UNLOCK signal is transmitted from Intelligent Key again within 60 seconds, all other doors are unlocked.

Selective unlock operation mode can be changed using “DOOR LOCK-UNLOCK SET” mode in “WORK SUPPORT”. Refer to DLK-47, "DOOR LOCK : CONSULT Function (BCM - DOOR LOCK)".

TRUNK OPEN FUNCTION

- When trunk button of the Intelligent Key is pressed, the trunk open signal is transmitted from the Intelligent Key to the BCM via remote keyless entry receiver.
- When BCM receives the trunk open request signal, it operates the trunk lid opener actuator and opens the trunk.

OPERATION CONDITION

Remote controller operation	Operation condition	Operation
Trunk open	• Press and hold the trunk open button for 0.5 second or more* • Ignition switch is except the ON position • Trunk lid opener cancel switch is ON • Vehicle speed is less than 5 km/h (3 MPH)	Trunk open

*: Pattern of trunk open button can be selected using CONSULT. Refer to DLK-49, "INTELLIGENT KEY : CONSULT Function (BCM - INTELLIGENT KEY)".

HAZARD AND HORN REMINDER FUNCTION

When doors are locked or unlocked by Intelligent Key, BCM blinks hazard warning lamps as a reminder and transmits horn chirp signal to IPDM E/R. IPDM E/R sounds horn as a reminder.
The hazard and horn reminder has a horn chirp mode (C mode) and a non-horn chirp mode (S mode).

Operating Function of Hazard and Horn Reminder

	C mode			S mode		
Intelligent Key operation	Lock	Unlock	Trunk open	Lock	Unlock	Trunk open
Hazard warning lamp blinks	Twice	Once	—	Twice	—	—
Horn sound	Once	—	—	—	—	—

Hazard and horn reminder does not operate in the following condition.
- Ignition switch position is ON
- Door is open

How to change hazard and horn reminder mode

With CONSULT

Refer to DLK-49, "INTELLIGENT KEY : CONSULT Function (BCM - INTELLIGENT KEY)".

Without CONSULT

When LOCK and UNLOCK signals are sent from the Intelligent Key for more than 2 seconds at the same time, the hazard and horn reminder mode is changed and hazard warning lamp blinks and horn sounds as per the following items:

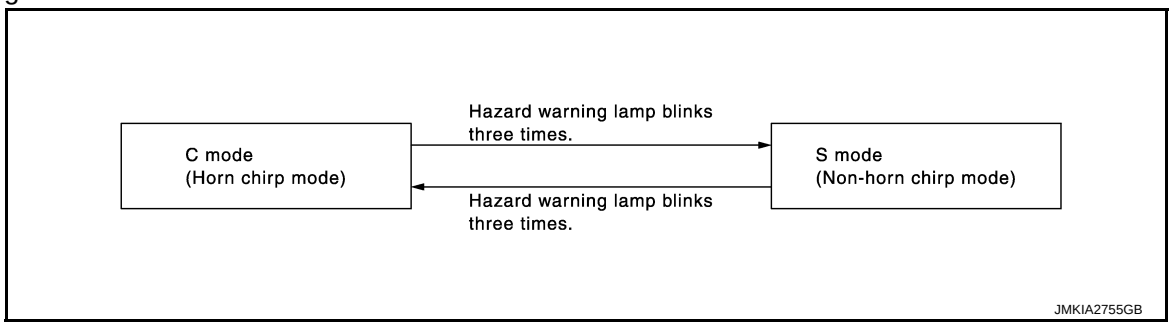

AUTO DOOR LOCK FUNCTION

When all doors and fuel lid are locked, ignition switch is OFF (ignition switch is not pressed) and key switch is OFF (Intelligent Key is not inserted in key slot), doors and fuel lid are unlocked with Intelligent Key button. When BCM does not receive the following signals within 60 seconds, all doors and fuel lid are locked.

- Door switch is ON (door is open)
- Door is locked
- Ignition switch is ON
- Key switch is ON (Intelligent Key is inserted in key slot)

Auto door lock mode can be changed by the “AUTO LOCK SET” mode in “WORK SUPPORT”. Refer to DLK-49, "INTELLIGENT KEY : CONSULT Function (BCM - INTELLIGENT KEY)".

PANIC ALARM FUNCTION

When ignition switch is OFF (ignition switch is not pressed) and key switch is OFF (Intelligent Key is not inserted in key slot), BCM receives PANIC ALARM signal from Intelligent Key.
BCM turns on and off headlamp intermittently and transmits theft warning horn signal to IPDM E/R. Then, IPDM E/R turns on and off horn intermittently.
The headlamp blinks and the horn sounds intermittently.
The alarm automatically turns off:

- After 25 seconds
- When BCM receives any signal from Intelligent Key

Panic alarm function mode can be changed by “PANIC ALARM SET” mode in “WORK SUPPORT”. Refer to DLK-49, "INTELLIGENT KEY : CONSULT Function (BCM - INTELLIGENT KEY)".

KEYLESS POWER WINDOW DOWN (OPEN) FUNCTION

Driver side and passenger side power windows open when the unlock button on Intelligent Key is activated and kept pressed for more than 3 seconds with the ignition switch OFF. The windows keep opening if the unlock button is continuously pressed.
The power window opening stops when the following operations are performed:

- When the unlock button is kept pressed more than 15 seconds.
- When the ignition switch is turned ON while the power window opening is operated.
- When the unlock button is released.

Keyless power window down operation mode can be changed by “PW DOWN SET” mode in “WORK SUPPORT”. Refer to DLK-49, "INTELLIGENT KEY : CONSULT Function (BCM - INTELLIGENT KEY)".

INTERIOR ROOM LAMP CONTROL

Intelligent Key system turns on interior lamp by receiving UNLOCK signal from Intelligent Key. For detailed description, refer to INL-6, "System Description".

LIST OF OPERATION RELATED PARTS

Parts marked with × are the parts related to operation.

Remote keyless entry functions	Intelligent Key	Key slot	Door request switch (Driver, Passenger)	Door switch	Door lock actuator	Intelligent Key warning buzzer	CAN communication system	BCM	Combination meter	Unified meter and A/C amp.	Hazard warning lamp	Horn	IPDM E/R	Head lamp	Trunk lid opener actuator
Door lock/unlock function by remote control button	×	×		×	×		×	×							
Trunk open function by remote control button	×					×	×	×		×					×
Hazard and horn reminder function	×					×	×	×	×		×	×	×		
Selective unlock function	×			×	×		×	×							
Keyless power window down (open) function	×	×					×	×							
Auto door lock function	×	×		×			×	×							
Panic alarm function	×		×				×	×				×	×	×	

REMOTE KEYLESS ENTRY FUNCTION : Component Parts Location

INFOID:0000000008160522

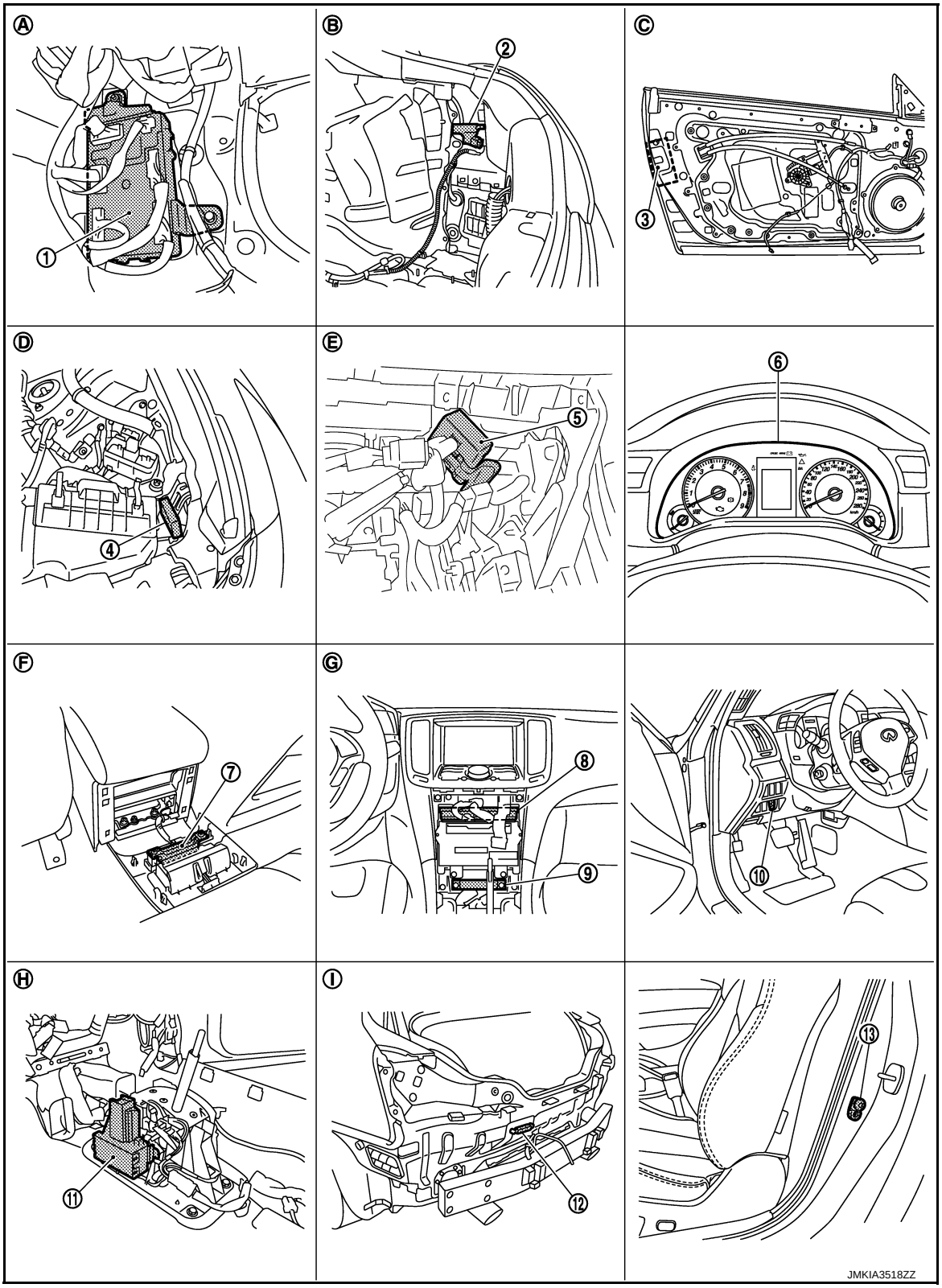

1. BCM M118, M119, M120, M121, M122, M123
2. Fuel lid lock actuator B242
3. Driver side door lock assembly D15
4. Intelligent Key warning buzzer E57
5. Remote keyless entry receiver M104
6. Combination meter M53
7. Inside key antenna (console) M146
8. Unified meter and A/C amp. M66, M67
9. Inside key antenna (instrument center) M131

10. Key slot M22	11. A/T shift selector (detention switch)* M137	12. Outside key antenna (rear bumper) B63
13. Driver side door switch B16		
A. Dash side lower (passenger side)	B. View with trunk side finisher removed	C. View with driver side door finisher removed
D. View with hood seal assembly removed	E. Engine room dash panel	F. View with console rear finisher removed
G. View with cluster lid C removed	H. View with center console assembly removed	I. View with rear bumper removed

*: With A/T models

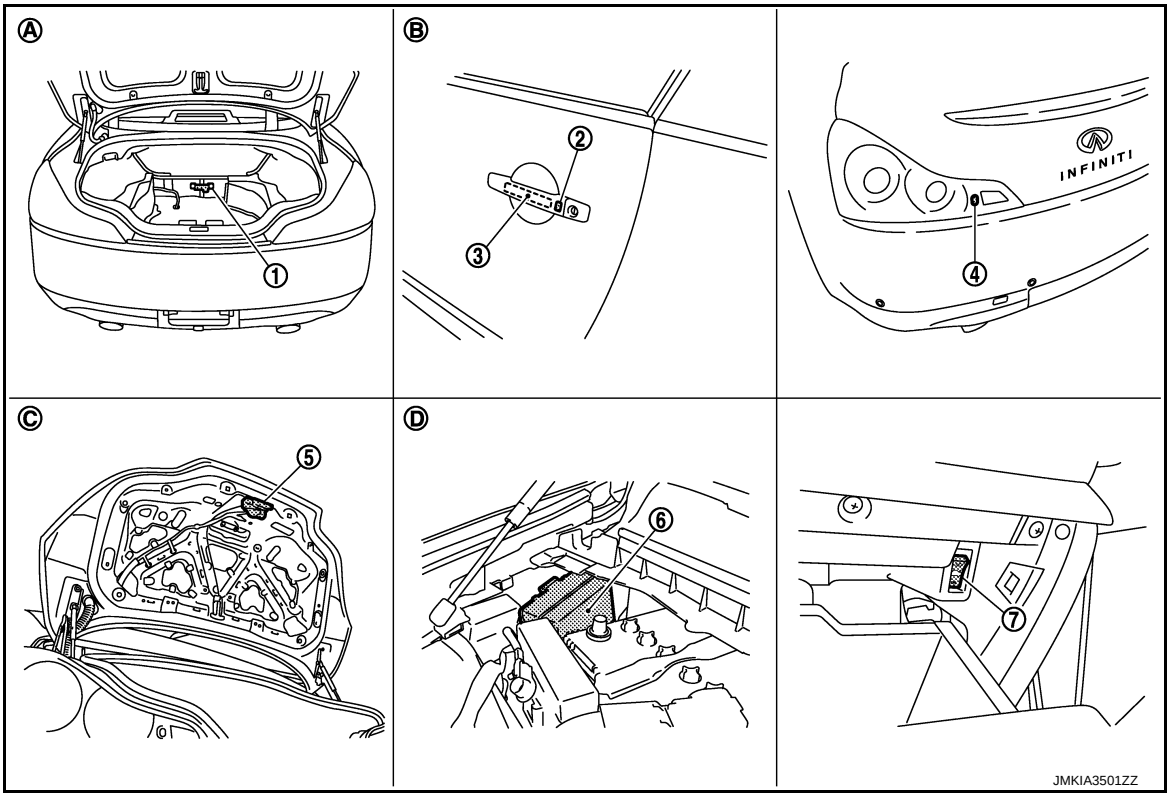

1. Inside key antenna (trunk room) B49	2. Outside handle LH (request switch) D13	3. Outside handle LH (outside key antenna) D14
4. Rear combination lamp LH (trunk lid opener request switch) B60	5. Trunk lid lock assembly B303	6. IPDM E/R E5, E6
7. Trunk lid opener cancel switch M105		
A. View with trunk front finisher removed	B. View with driver side door	C. View with trunk lid finisher removed
D. Engine room dash panel (RH)		

REMOTE KEYLESS ENTRY FUNCTION : Component Description

INFOID:0000000008160523

Item	Function
BCM	Controls the door lock function and trunk open function.
IPDM E/R	Sounds horn and blinks head lamp via CAN communication between BCM.
Door lock actuator	Outputs lock/unlock signal from BCM and locks/unlocks each door.
Door switch	Inputs door open/close condition to BCM.
Key slot	Inputs key insert/remove signal to BCM.
Remote keyless entry receiver	Receives lock/unlock signal from the Intelligent Key, and then transmits to BCM.

Item	Function
Combination meter	Hazard warning lamp is installed to combination meter.
Unified meter and A/C amp.	Transmits vehicle seep signal to CAN communication line.
Intelligent Key	Transmits button operation to remote keyless entry receiver.
Trunk lid opener actuator	Transmits trunk lid open operation to BCM.
Trunk lid opener cancel switch	Cancels the trunk open operation.
Fuel lid lock actuator	Performs lock/unlock of the fuel lid.
Push-button ignition switch	Input push-button ignition switch ON/OFF condition to BCM.
Intelligent Key warning buzzer	Warns the user of the lock/unlock condition and inappropriate operations with the buzzer sound.
Hazard warning lamp	Warns the user of the door lock/unlock condition and in appropriate operations with the lamps blink.

KEY REMINDER FUNCTION

KEY REMINDER FUNCTION : System Diagram

INFOID:0000000008160524

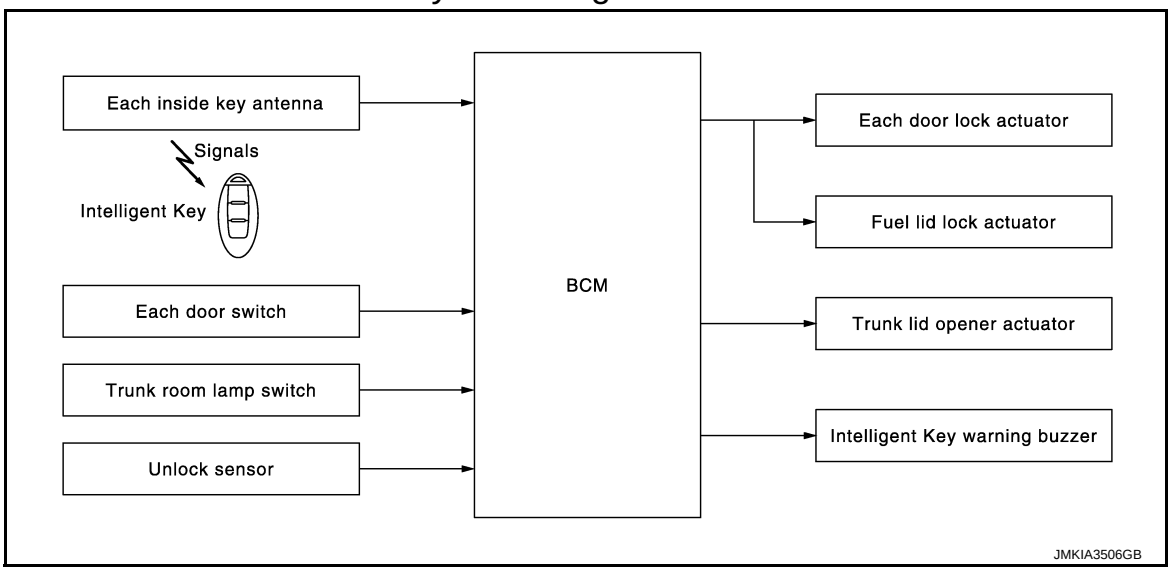

KEY REMINDER FUNCTION : System Description

INFOID:0000000008160525

Key reminder is the function that prevents the key from being left in the vehicle.
Key reminder has the following 3 functions.

Key remainder function	Operation condition	Operation
Driver door closed*	Right after driver side door is closed under the following conditions • Door lock operation is performed • Driver side door is open • Driver side door is in unlock state	All doors unlock
Door is open or closed	Right after all doors are closed under the following conditions • Intelligent Key is inside the vehicle • Any door is open • All doors are locked by door lock and unlock switch or door lock knob	• All doors unlock • Honk Intelligent Key warning buzzer
Trunk is closed	Right after trunk is closed under the following conditions • Intelligent Key is inside trunk room • All doors are closed • All doors are locked	• Trunk open • Honk Intelligent Key warning buzzer

*:If the door closing impact shocks the door lock knob, or contacts against baggage with the door lock knob might activate the door locks accidentally but unlock operation is perform in these cases.

CAUTION:

- **The above function operates when the Intelligent Key is inside the vehicle. However, there may be times when the Intelligent Key cannot be detected, and this function does operate when the Intelli-**

gent Key is on the instrument panel, rear parcel shelf, or in the glove box. Also, this system sometimes does not operate if the Intelligent Key is in the door pocket for the open door.

KEY REMINDER FUNCTION : Component Parts Location

INFOID:0000000008160526

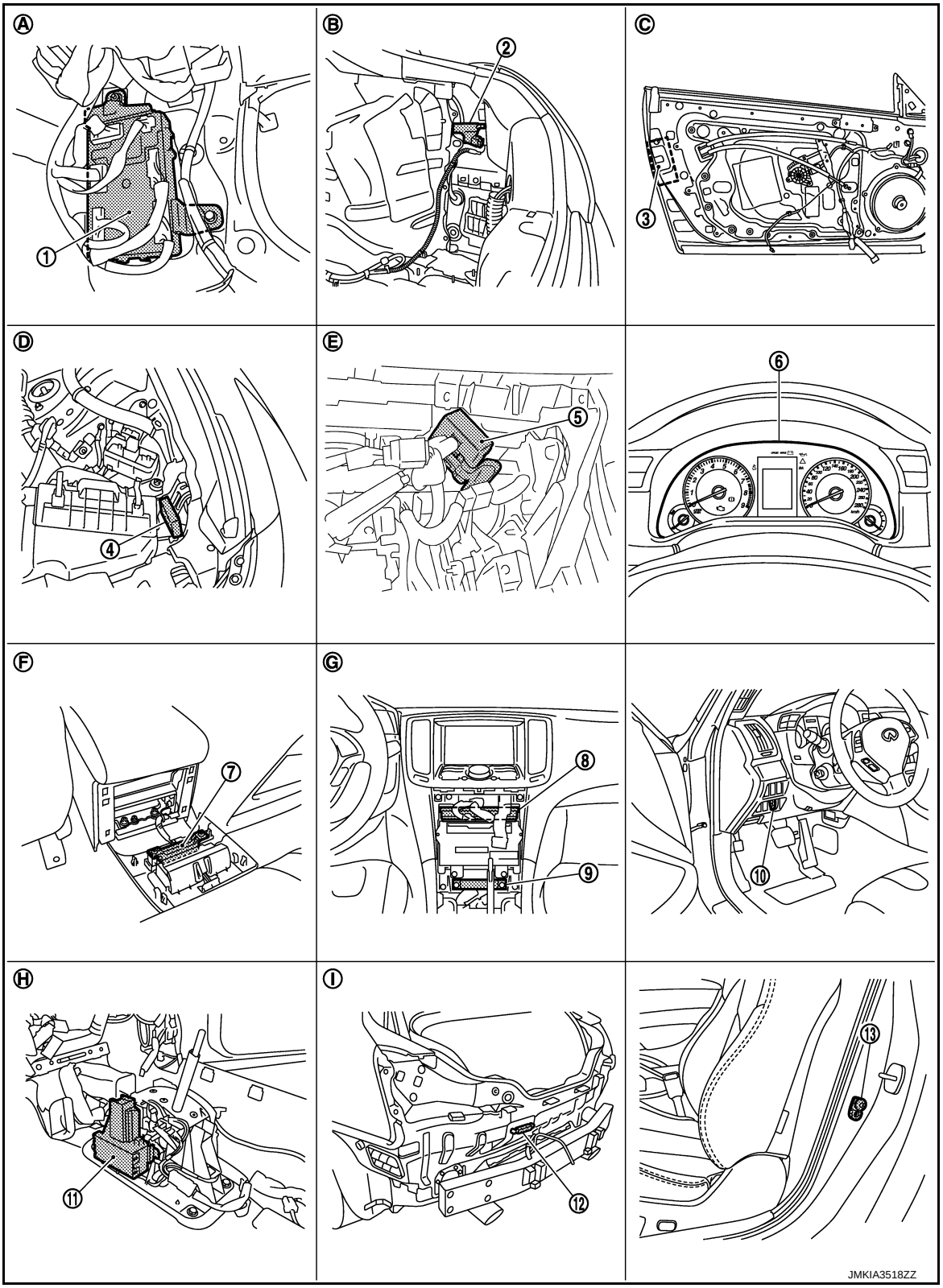

1. BCM M118, M119, M120, M121, M122, M123
2. Fuel lid lock actuator B242
3. Driver side door lock assembly D15
4. Intelligent Key warning buzzer E57
5. Remote keyless entry receiver M104
6. Combination meter M53

7. Inside key antenna (console) M146	8. Unified meter and A/C amp. M66, M67	9. Inside key antenna (instrument center) M131
10. Key slot M22	11. A/T shift selector (detention switch)* M137	12. Outside key antenna (rear bumper) B63
13. Driver side door switch B16		
A. Dash side lower (passenger side)	B. View with trunk side finisher removed	C. View with driver side door finisher removed
D. View with hood seal assembly removed	E. Engine room dash panel	F. View with console rear finisher removed
G. View with cluster lid C removed	H. View with center console assembly removed	I. View with rear bumper removed

*: With A/T models

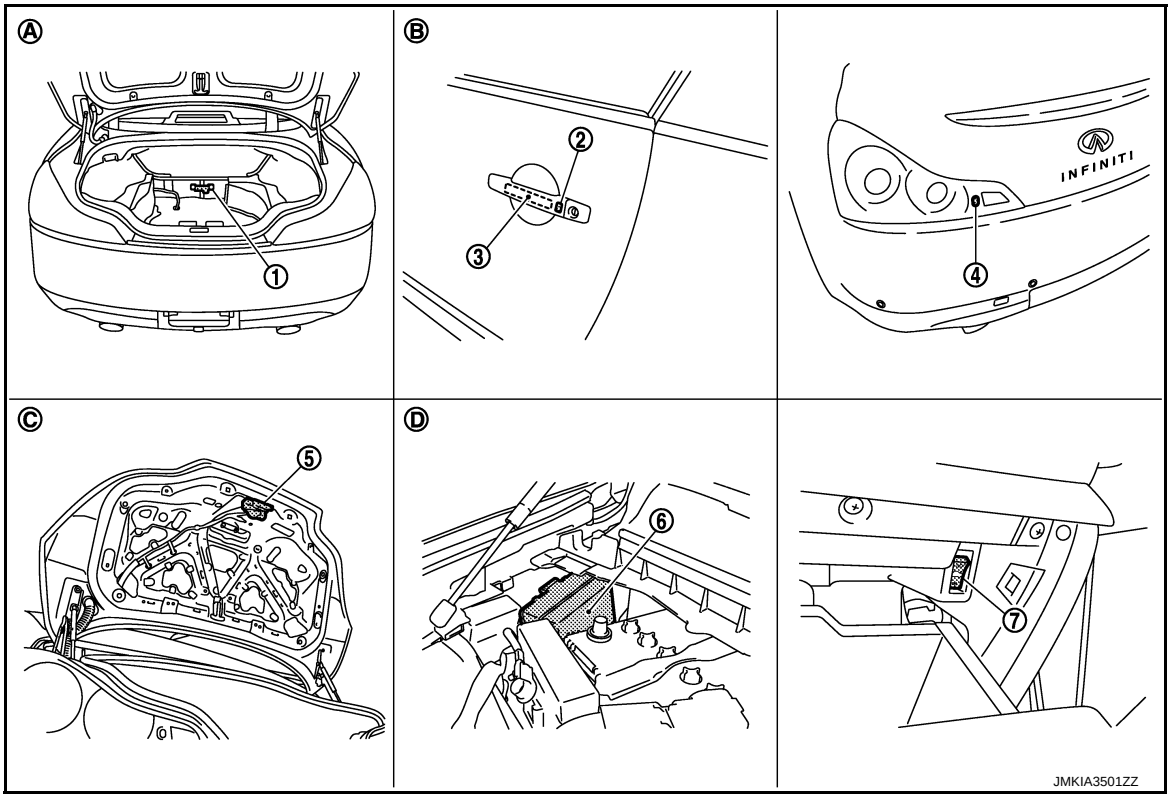

1. Inside key antenna (trunk room) B49	2. Outside handle LH (request switch) D13	3. Outside handle LH (outside key antenna) D14
4. Rear combination lamp LH (trunk lid opener request switch) B60	5. Trunk lid lock assembly B303	6. IPDM E/R E5, E6
7. Trunk lid opener cancel switch M105		
A. View with trunk front finisher removed	B. View with driver side door	C. View with trunk lid finisher removed
D. Engine room dash panel (RH)		

WARNING FUNCTION

WARNING FUNCTION : System Description

INFOID:0000000008160527

OPERATION DESCRIPTION

The warning function are as per the following items and are given to the user as warning information and warnings using combinations of Intelligent Key warning buzzer, KEY warning lamp, key slot indicator and information display in combination meter.

- Intelligent Key system malfunction
- OFF position warning
- P position warning

- ACC warning
- Take away warning
- Door lock operation warning
- Key warning
- Intelligent Key insert information
- Engine start information
- Intelligent Key low battery warning
- Key ID warning

OPERATION CONDITION

Once the following condition from below is established, alert or warning is executed.

Warning/Information functions		Operation procedure
Intelligent Key system malfunction		When a malfunction is detected on BCM, “KEY” warning lamp illuminates.
OFF position warning	For internal	When condition A, B or condition C is satisfied • Condition A - Ignition switch: ACC position - Door switch (driver side): ON (Door is open) • Condition B - Turn ignition switch from ON to OFF while door is open • Condition C - Intelligent Key is inserted in key slot - Door switch (driver side): ON (Door is open)
	For external*	OFF position warning (For internal) is in active mode, driver side door is closed. **NOTE:** OFF position (For external) active only when each of the sequence occurs as below: P position warning → ACC warning → OFF position warning (For internal) → OFF position warning (For internal)
P position warning*	For internal	• Shift position: Except P position. • Engine is running to stopped (Ignition switch is ON to OFF).
	For external	Warning is activated when driver door is closed from the open position while the P position warning (for inside vehicle) is ON.
ACC warning*		• When P position warning is in active mode, shift position changes P position. • Ignition switch: ACC position.
Take away warning	Door is open to close	• Ignition switch: Except LOCK position. • Door switch: ON to OFF (Door is open to close). • Intelligent Key cannot be detected inside the vehicle.
	Door is open	• Door switch: ON (Door is open). • Key ID verification every 5 seconds when registered Intelligent Key cannot be detected inside the vehicle.
	Push button-ignition switch operation	• Ignition switch: Except LOCK position. • Press push-button ignition switch. • Intelligent Key cannot be detected inside the vehicle.
	Intelligent Key is removed from key slot	• When Intelligent Key is removed from key slot, Intelligent Key cannot be detected inside the vehicle.
Door lock operation warning		When door lock operation is requested while door lock operating condition of door request switch not satisfied.
Key warning		• Ignition switch is OFF position. • Driver side door switch: ON (Driver side door is open). • Intelligent Key is inserted in key slot.
Intelligent Key insert information		• Door switch: ON to OFF (Door is open to close). • Intelligent Key is out of key slot. • Intelligent Key cannot be detected inside the vehicle.

Warning/Information functions		Operation procedure
Engine start information	Ignition switch is ON position	• Ignition switch: ON position. • Shift position: P position.* • Engine is stopped.
	Ignition switch is except ON position	• Ignition switch: Except ON position. • Shift position: P position.* • Intelligent Key is inserted in key slot or Intelligent Key can be detected inside the vehicle.
Intelligent Key low battery warning		When Intelligent Key is low battery, BCM is detected after ignition switch is turned ON.
Key ID warning		When registered intelligent Key cannot be detected inside the vehicle after ignition switch is turned ON.

*: M/T models do not apply.

WARNING METHOD

The following table shows the alarm or warning methods with chime.
Information display (combination meter), “KEY” indicator or key slot indicator when the warning conditions are met.

Warning/Information functions		“KEY” warning lamp	Information display (combination meter)	Key slot indicator	Warning chime	
					Combination meter buzzer	Intelligent Key warning buzzer
Intelligent Key system malfunction		Illuminate	—	—	—	—
OFF position warning	For internal	—	—	—	Activate	—
	For external*	—	—	—	—	Activate
P position warning*	For internal	—	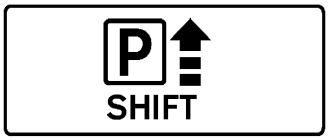 JMKIA0037GB	—	Activate	—
	For external			—	—	Active
ACC warning*		—	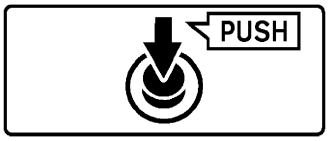 JMKIA0047GB	—	—	—
Take away warning	Door is open to close	—	 JMKIA0036GB	Blink	Activate	Activate
	Door is open	—		Blink	—	—
	Push-ignition switch operation	—		Blink	Activate	—
	Intelligent Key is removed from key slot	—		Blink	—	—
Door lock operation warning	Request switch operation	—	—	—	—	Activate

Warning/Information functions		"KEY" warning lamp	Information display (combination meter)	Key slot indicator	Warning chime	
					Combination meter buzzer	Intelligent Key warning buzzer
Key ID warning		—	 JMKIA0036GB	—	—	—
Key warning		—	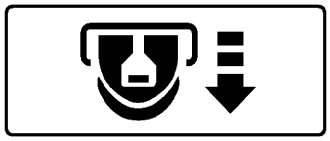 JMKIA0035GB	Blink	Activate	—
Intelligent Key insert information		—	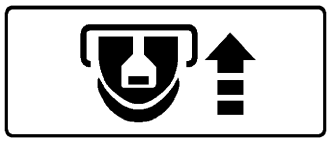 JMKIA0034GB	Indicate	—	—
Engine start information	Automatic transmission models	—	 JMKIA0032GB	—	—	—
	Manual transmission models	—	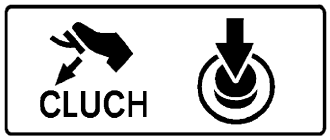 JMKIA0049GB	—	—	—
Intelligent Key low battery warning		—	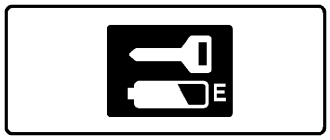 JMKIA0048GB	—	—	—

*: M/T models do not apply.

LIST OF OPERATION RELATED PARTS

Parts marked with × are the parts related to operation.

Warning function		Intelligent Key	Key slot	Ignition switch	Door switch	Door request switch	Inside key antenna	Outside key antenna	Intelligent Key warning buzzer	Combination meter warning buzzer	CAN communication system	BCM	Combination meter display	Key slot indicator	Detention switch	"KEY" warning lamp
Intelligent Key system malfunction											×	×				×
OFF position warning	For internal				×					×	×	×				
	For external				×				×			×				
P position warning				×						×	×	×	×		×	
ACC warning				×						×	×	×	×		×	
Take away warning	Door is open or close	×			×		×		×	×	×	×	×	×		
	Door is open	×			×		×				×	×	×	×		
	Push-button ignition switch operation	×		×			×			×	×	×	×	×		
	Intelligent Key is removed from key slot	×	×				×				×	×	×	×		
Door lock operation warning		×	×		×	×	×	×	×			×				
Key ID warning			×	×			×				×	×	×			
Key warning		×	×		×					×	×	×	×	×		
Intelligent Key insert information		×	×	×	×		×				×	×	×	×		
Engine start information	Ignition switch is ON position	×	×	×			×				×	×	×		×	
	Ignition switch is except ON position	×	×	×			×				×	×	×			
Intelligent Key low battery warning		×					×				×	×	×			

WARNING FUNCTION : Component Parts Location

INFOID:0000000008160528

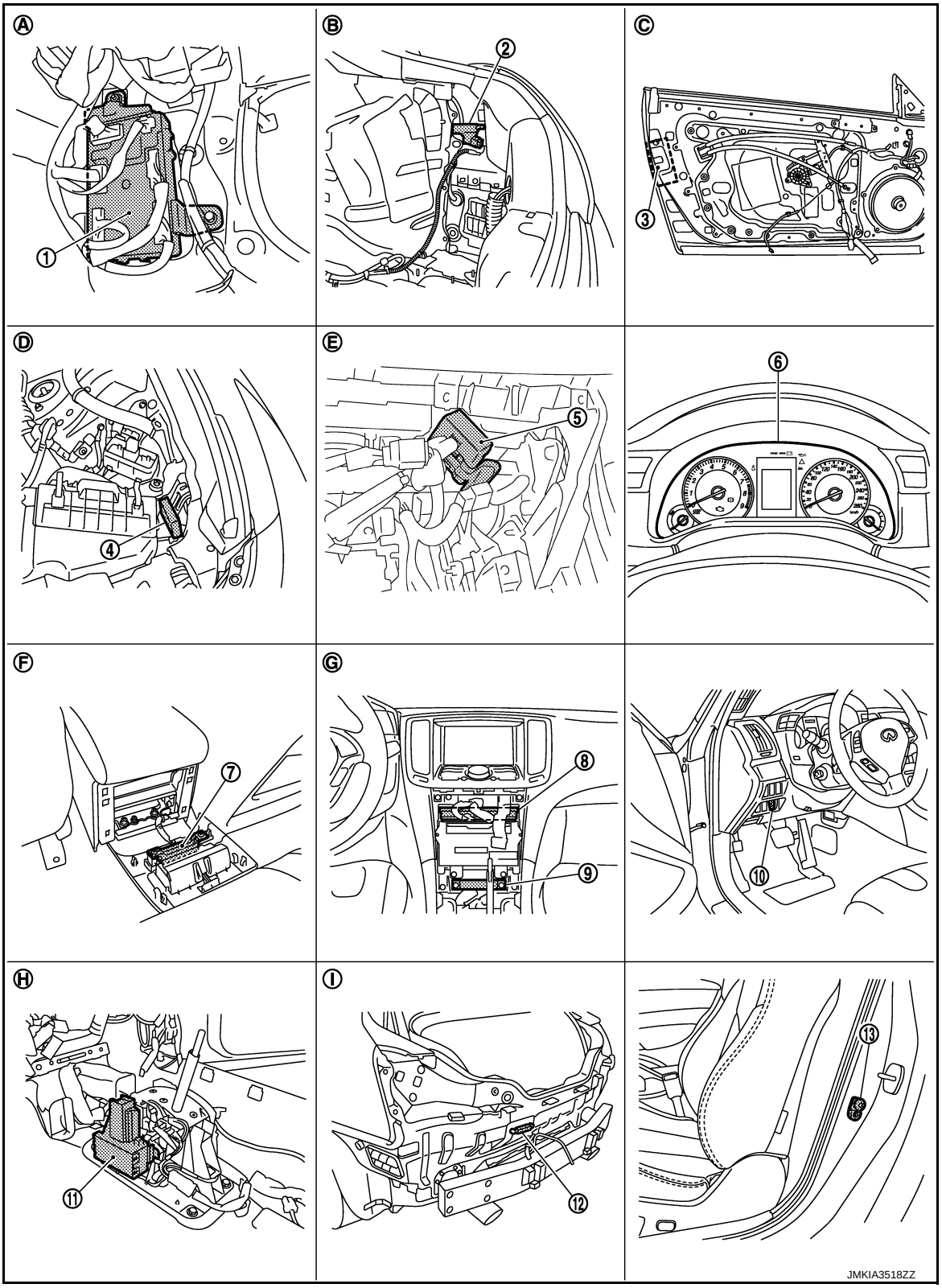

1. BCM M118, M119, M120, M121, M122, M123
2. Fuel lid lock actuator B242
3. Driver side door lock assembly D15
4. Intelligent Key warning buzzer E57
5. Remote keyless entry receiver M104
6. Combination meter M53
7. Inside key antenna (console) M146
8. Unified meter and A/C amp. M66, M67
9. Inside key antenna (instrument center) M131

10. Key slot M22	11. A/T shift selector (detention switch)* M137	12. Outside key antenna (rear bumper) B63
13. Driver side door switch B16		
A. Dash side lower (passenger side)	B. View with trunk side finisher removed	C. View with driver side door finisher removed
D. View with hood seal assembly removed	E. Engine room dash panel	F. View with console rear finisher removed
G. View with cluster lid C removed	H. View with center console assembly removed	I. View with rear bumper removed

*: With A/T models

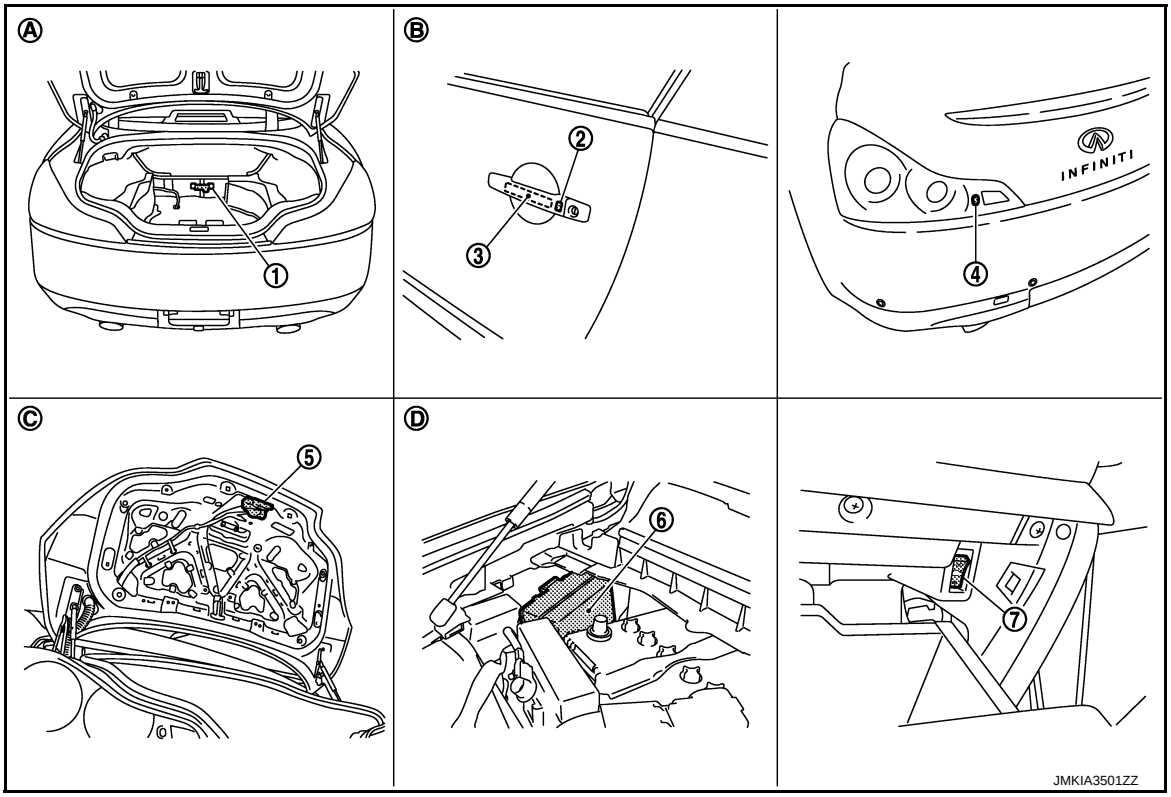

1. Inside key antenna (trunk room) B49	2. Outside handle LH (request switch) D13	3. Outside handle LH (outside key antenna) D14
4. Rear combination lamp LH (trunk lid opener request switch) B60	5. Trunk lid lock assembly B303	6. IPDM E/R E5, E6
7. Trunk lid opener cancel switch M105		
A. View with trunk front finisher removed	B. View with driver side door	C. View with trunk lid finisher removed
D. Engine room dash panel (RH)		

TRUNK OPEN FUNCTION

System Diagram

INFOID:0000000008160529

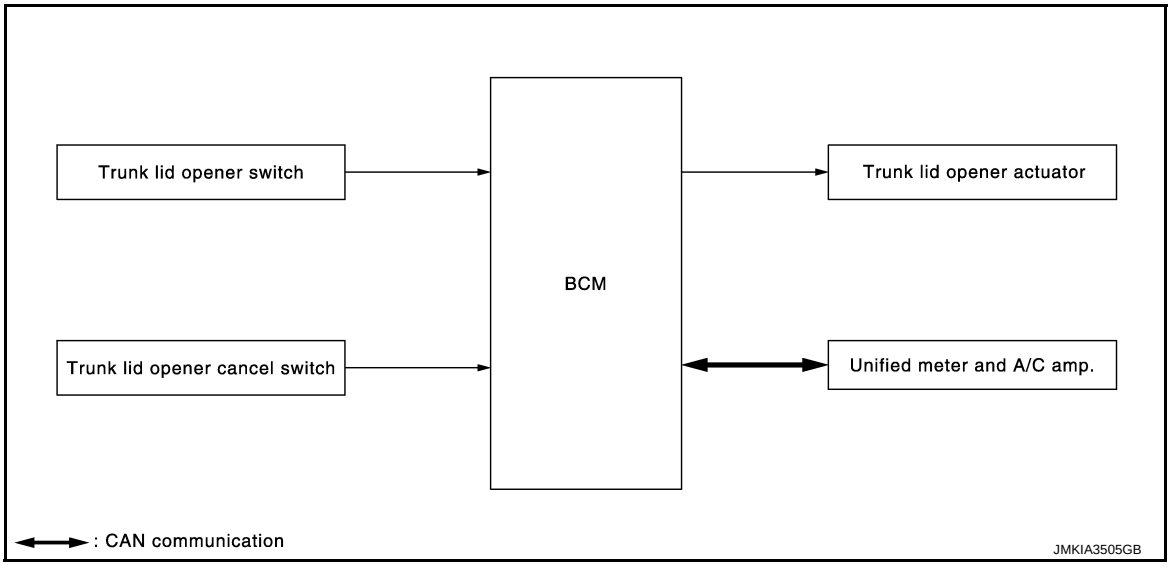

System Description

INFOID:0000000008160530

TRUNK LID OPENER OPERATION

When trunk lid opener switch is ON, BCM opens trunk opener actuator.
BCM can open trunk lid opener actuator when
- Trunk lid opener cancel switch is ON
- Vehicle speed is less than 5 km/h (3 MPH)
- Vehicle security system is in the disarmed or pre-armed phase

BCM does not open trunk lid opener actuator when
- Vehicle speed is more than 5 km/h (3 MPH)
- Vehicle security system is in the armed or alarm phase
- Trunk lid opener cancel switch is OFF

Component Parts Location

INFOID:0000000008160531

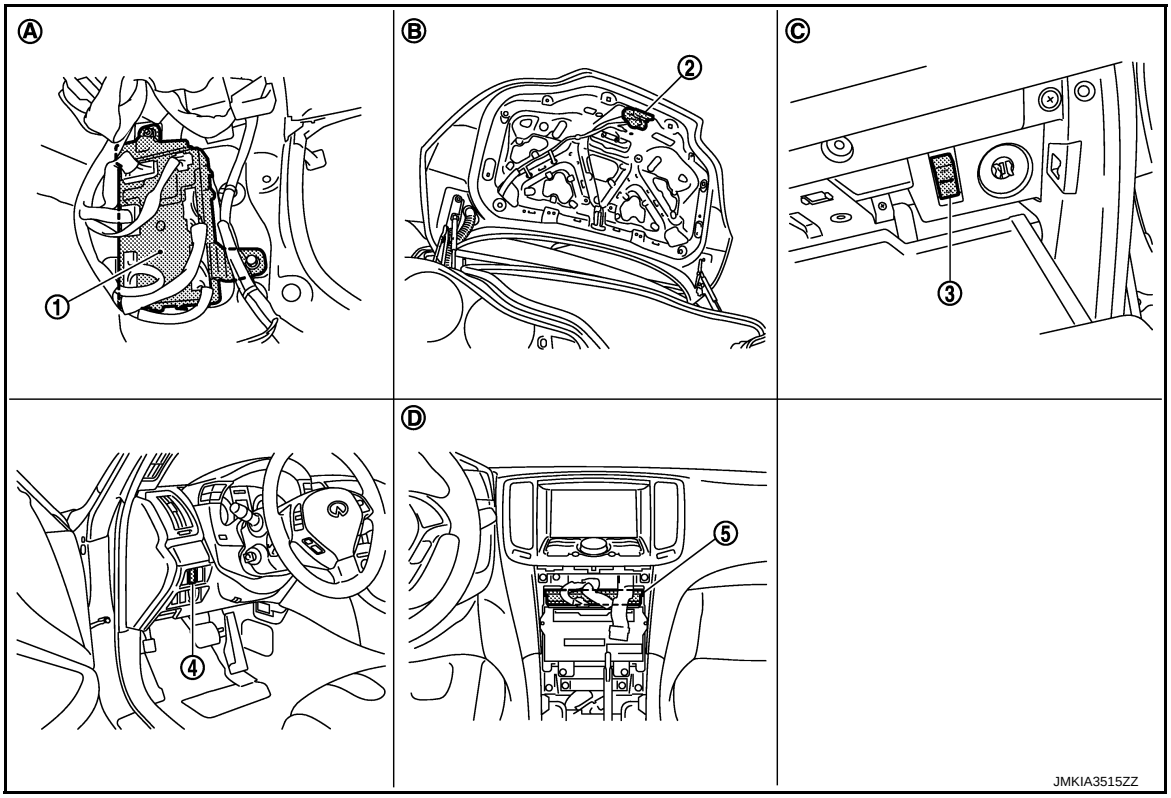

1. BCM M118, M119, M120, M121, M122, M123
2. Trunk lid lock assembly (trunk lid opener actuator) B303
3. Trunk lid opener cancel switch M105
4. Trunk lid opener switch M20
5. Unified meter and A/C amp. M67

A. Dash side lower (passenger side)
B. View with trunk lid finisher removed
C. View with glove box open
D. View with cluster lid C removed

Component Description

INFOID:0000000008160532

Item	Function
BCM	Controls trunk lid open operation.
Trunk lid opener switch	Transmits trunk open operation to BCM.
Trunk lid opener actuator	Opens the trunk after receiving the open signal from BCM.
Trunk lid opener cancel switch	Cancels the trunk open operation.
Unified meter and A/C amp.	Transmits vehicle speed signal to CAN communication line.

INTEGRATED HOMELINK TRANSMITTER

Component Description

INFOID:0000000008160533

Item	Function
Integrated home link transmitter	A maximum of 3 radio signals can be stored and transmitted to operate the garage door, etc.

DIAGNOSIS SYSTEM (BCM)

COMMON ITEM

COMMON ITEM : CONSULT Function (BCM - COMMON ITEM)

INFOID:0000000008793435

APPLICATION ITEM

CONSULT performs the following functions via CAN communication with BCM.

Diagnosis mode	Function Description
Work Support	Changes the setting for each system function.
Self Diagnostic Result	Displays the diagnosis results judged by BCM.
CAN Diag Support Monitor	Monitors the reception status of CAN communication viewed from BCM.
Data Monitor	The BCM input/output signals are displayed.
Active Test	The signals used to activate each device are forcibly supplied from BCM.
Ecu Identification	The BCM part number is displayed.
Configuration	This function is not used even though it is displayed.

SYSTEM APPLICATION

BCM can perform the following functions for each system.

NOTE:

It can perform the diagnosis modes except the following for all sub system selection items.

×: Applicable item

System	Sub system selection item	Diagnosis mode		
		Work Support	Data Monitor	Active Test
Door lock	DOOR LOCK	×	×	×
Rear window defogger	REAR DEFOGGER		×	×
Warning chime	BUZZER		×	×
Interior room lamp timer	INT LAMP	×	×	×
Exterior lamp	HEAD LAMP	×	×	×
Wiper and washer	WIPER	×	×	×
Turn signal and hazard warning lamps	FLASHER	×	×	×
—	AIR CONDITONER*			
• Intelligent Key system • Engine start system	INTELLIGENT KEY	×	×	×
Combination switch	COMB SW		×	
Body control system	BCM	×		
IVIS - NATS	IMMU		×	×
Interior room lamp battery saver	BATTERY SAVER	×	×	×
Trunk lid open	TRUNK		×	×
Vehicle security system	THEFT ALM	×	×	×
RAP system	RETAINED PWR		×	
Signal buffer system	SIGNAL BUFFER		×	×
TPMS	AIR PRESSURE MONITOR	×	×	×

NOTE:

*: This item is displayed, but is not used.

FREEZE FRAME DATA (FFD)

The BCM records the following vehicle condition at the time a particular DTC is detected, and displays on CONSULT.

CONSULT screen item	Indication/Unit	Description	
Vehicle Speed	km/h	Vehicle speed of the moment a particular DTC is detected	
Odo/Trip Meter	km	Total mileage (Odometer value) of the moment a particular DTC is detected	
Vehicle Condition	SLEEP>LOCK	Power supply position status of the moment a particular DTC is detected	While turning BCM status from low power consumption mode to normal mode (Power supply position is “LOCK”*)
	SLEEP>OFF		While turning BCM status from low power consumption mode to normal mode (Power supply position is “OFF”.)
	LOCK>ACC		While turning power supply position from “LOCK”* to “ACC”
	ACC>ON		While turning power supply position from “ACC” to “IGN”
	RUN>ACC		While turning power supply position from “RUN” to “ACC” (Except emergency stop operation)
	CRANK>RUN		While turning power supply position from “CRANKING” to “RUN” (From cranking up the engine to run it)
	RUN>URGENT		While turning power supply position from “RUN“ to “ACC” (Emergency stop operation)
	ACC>OFF		While turning power supply position from “ACC” to “OFF”
	OFF>LOCK		While turning power supply position from “OFF” to “LOCK”*
	OFF>ACC		While turning power supply position from “OFF” to “ACC”
	ON>CRANK		While turning power supply position from “IGN” to “CRANKING”
	OFF>SLEEP		While turning BCM status from normal mode (Power supply position is “OFF”.) to low power consumption mode
	LOCK>SLEEP		While turning BCM status from normal mode (Power supply position is “LOCK”*.) to low power consumption mode
	LOCK		Power supply position is “LOCK”*
	OFF		Power supply position is “OFF” (Ignition switch OFF)
	ACC		Power supply position is “ACC” (Ignition switch ACC)
	ON		Power supply position is “IGN” (Ignition switch ON with engine stopped)
	ENGINE RUN		Power supply position is “RUN” (Ignition switch ON with engine running)
	CRANKING		Power supply position is “CRANKING” (At engine cranking)
IGN Counter	0 - 39	The number of times that ignition switch is turned ON after DTC is detected • The number is 0 when a malfunction is detected now. • The number increases like 1 → 2 → 3...38 → 39 after returning to the normal condition whenever ignition switch OFF → ON. • The number is fixed to 39 until the self-diagnosis results are erased if it is over 39.	

NOTE:

*: Power supply position shifts to “LOCK” from “OFF”, when ignition switch is in the OFF position, selector lever is in the P position (A/T models), and any of the following conditions are met.

- Closing door
- Opening door
- Door is locked using door request switch
- Door is locked using Intelligent Key

The power supply position shifts to “ACC” when the push-button ignition switch (push switch) is pushed at “LOCK”.

DOOR LOCK

DOOR LOCK : CONSULT Function (BCM - DOOR LOCK)

INFOID:0000000008160535

BCM CONSULT FUNCTION

CONSULT performs the following functions via CAN communication with BCM.

Diagnosis mode	Function Description
WORK SUPPORT	Changes the setting for each system function.
DATA MONITOR	The BCM input/output signals are displayed.
ACTIVE TEST	The signals used to activate each device are forcibly supplied from BCM.

WORK SUPPORT

Monitor item	Description
DOOR LOCK-UNLOCK SET	Selective unlock function mode can be changed to operate (ON) or not operate (OFF) with this mode.
AUTOMATIC DOOR LOCK SELECT	Automatic door lock function mode can be selected from the following in this mode. • VH SPD: All doors are locked when vehicle speed more than 24km/h (15MPH) • P RANGE*: All doors are locked when shifting the selector lever from P position to other than the P position
AUTOMATIC DOOR UNLOCK SELECT	Automatic door unlock function mode can be selected from the following in the mode. • MODE 1: All doors are unlocked when the power supply position is changed from ON to OFF • MODE 2*: All doors are unlocked when shifting the selector lever from any position other than the P to P position • MODE 3: Driver side door is unlocked when the power supply position is changed from ON to OFF • MODE 4*: Driver side door is unlocked when shifting the selector lever from any position other than the P to P position
AUTOMATIC LOCK/UNLOCK SET	Automatic door lock/unlock function mode can be selected from the following in this mode. • Off: non-operational • Unlock Only: door unlock operation only • Lock Only: door lock operation only • Lock/Unlock: lock/unlock operation

*: P range interlock door lock can be selected for M/T models, but automatic door lock/unlock function does not operate.

DATA MONITOR

NOTE:
The following table includes information (items) inapplicable to this vehicle. For information (items) applicable to this vehicle, refer to CONSULT display items.

Monitor Item	Contents
REQ SW-DR	Indicated [ON/OFF] condition of door request switch (driver side).
REQ SW-AS	Indicated [ON/OFF] condition of door request switch (passenger side).
REQ SW-BD/TR	Indicated [ON/OFF] condition of trunk lid opener request switch.
DOOR SW-DR	Indicated [ON/OFF] condition of front door switch (driver side).
DOOR SW-AS	Indicated [ON/OFF] condition of front door switch (passenger side).
DOOR SW-RR	**NOTE:** This item is displayed, but cannot be monitored.
DOOR SW-RL	**NOTE:** This item is displayed, but cannot be monitored.
DOOR SW-BK	**NOTE:** This item is displayed, but cannot be monitored.
CDL LOCK SW	Indicated [ON/OFF] condition of lock signal from door lock unlock switch.
CDL UNLOCK SW	Indicated [ON/OFF] condition of unlock signal from door lock unlock switch.
KEY CYL LK-SW	Indicated [ON/OFF] condition of lock signal from door key cylinder.
KEY CYL UN-SW	Indicated [ON/OFF] condition of unlock signal from door key cylinder.

ACTIVE TEST

Test item	Description
DOOR LOCK	This test is able to check door lock/unlock operation. • The all door lock actuators are locked when “ALL LCK” on CONSULT screen is touched. • The all door lock actuators are unlocked when “ALL UNLK” on CONSULT screen is touched. • The door lock actuator (driver side) is unlocked when “DR UNLK” on CONSULT screen is touched. • The door lock actuator (passenger side) is unlocked when “AS UNLK” on CONSULT screen is touched. • “OTR ULK” item is displayed, but cannot be monitored.

INTELLIGENT KEY

INTELLIGENT KEY : CONSULT Function (BCM - INTELLIGENT KEY)

INFOID:0000000008160536

WORK SUPPORT

Monitor item	Description
CONFIRM KEY FOB ID	It can be checked whether Intelligent Key ID code is registered or not in this mode.
AUTO LOCK SET	Auto door lock time can be changed in this mode. • MODE 1: 1 minute • MODE 2: 5 minutes • MODE 3: 30 seconds • MODE 4: 2 minutes
LOCK/UNLOCK BY I-KEY	Door lock/unlock function by door request switch (driver side and passenger side) mode can be changed to operate (ON) or not operate (OFF) in this mode.
ENGINE START BY I-KEY	Engine start function mode can be changed to operate (ON) or not operate (OFF) with this mode.
TRUNK/GLASS HATCH OPEN	Buzzer reminder function mode by trunk opener request switch can be changed to operate (ON) or not operate (OFF) with this mode.
PANIC ALARM SET	Panic alarm button pressing time on Intelligent Key remote control button can be selected from the following with this mode. • MODE 1: 0.5 sec. • MODE 2: Non-operation • MODE 3: 1.5 sec.
PW DOWN SET	Unlock button pressing time on Intelligent Key button can be selected from the following with this mode. • MODE 1: 3 sec. • MODE 2: Non-operation • MODE 3: 5 sec.
TRUNK OPEN DELAY	Trunk button pressing on Intelligent Key button can be selected as per the following in this mode. • MODE 1: Press and hold • MODE 2: Press twice • MODE 3: Press and hold, or press twice
LO- BATT OF KEY FOB WARN	Intelligent Key low battery warning mode can be changed to operate (ON) or not operate (OFF) with this mode.
ANTI KEY LOCK IN FUNCTI	Key reminder function mode can be changed to operate (ON) or not operate (OFF) with this mode.
HAZARD ANSWER BACK	Hazard reminder function mode can be selected from the following with this mode. • LOCK ONLY: Door lock operation only • UNLOCK ONLY: Door unlock operation only • LOCK/UNLOCK: Lock/unlock operation • OFF: Non-operation
ANS BACK I-KEY LOCK	Buzzer reminder function (lock operation) mode by door request switch (driver side and passenger side) can be selected from the following with this mode. • Horn chirp: Sound horn • Buzzer: Sound Intelligent Key warning buzzer • OFF: Non-operation

Monitor item	Description
ANS BACK I-KEY UNLOCK	Buzzer reminder function (unlock operation) mode by door request switch can be changed to operate (ON) or not operate (OFF) with this mode.
SHORT CRANKING OUTPUT	Starter motor can operate during the times below. • 70 msec • 100 msec • 200 msec
INSIDE ANT DIAGNOSIS	This function allows inside key antenna self-diagnosis.
HORN WITH KEYLESS LOCK	Horn reminder function mode by Intelligent Key button can be changed to operate (ON) or not operate (OFF) with this mode.

SELF-DIAG RESULT

Refer to DLK-141, "DTC Index".

DATA MONITOR

NOTE:
The following table includes information (items) inapplicable to this vehicle. For information (items) applicable to this vehicle, refer to CONSULT display items.

Monitor Item	Condition
REQ SW -DR	Indicates [ON/OFF] condition of door request switch (driver side).
REQ SW -AS	Indicates [ON/OFF] condition of door request switch (passenger side).
REQ SW -BD/TR	Indicates [ON/OFF] condition of trunk opener request switch.
PUSH SW	Indicates [ON/OFF] condition of push-button ignition switch.
IGN RLY2 -F/B	Indicates [ON/OFF] condition of ignition relay 2.
ACC RLY-FB	**NOTE:** This item is displayed, but cannot be monitored.
CLUTCH SW*1	Indicates [ON/OFF] condition of clutch switch.
BRAKE SW 1	Indicates [ON/OFF]*2 condition of brake switch power supply.
BRAKE SW 2	Indicates [ON/OFF] condition of brake switch.
DETE/CANCL SW	Indicates [ON/OFF] condition of P position.
SFT PN/N SW	Indicates [ON/OFF] condition of P or N position.
S/L -LOCK	**NOTE:** This item is displayed, but cannot be monitored.
S/L -UNLOCK	**NOTE:** This item is displayed, but cannot be monitored.
S/L RELAY -F/B	**NOTE:** This item is displayed, but cannot be monitored.
UNLK SEN -DR	Indicates [ON/OFF] condition of driver door UNLOCK status.
PUSH SW -IPDM	Indicates [ON/OFF] condition of push-button ignition switch.
IGN RLY1 -F/B	Indicates [ON/OFF] condition of ignition relay 1.
DETE SW -IPDM	Indicates [ON/OFF] condition of P position.
SFT PN -IPDM	Indicates [ON/OFF] condition of P or N position.
SFT P -MET	Indicates [ON/OFF] condition of P position.
SFT N -MET	Indicates [ON/OFF] condition of N position.
ENGINE STATE	Indicates [STOP/STALL/CRANK/RUN] condition of engine states.
S/L LOCK-IPDM	**NOTE:** This item is displayed, but cannot be monitored.
S/L UNLK-IPDM	**NOTE:** This item is displayed, but cannot be monitored.
S/L RELAY-REQ	**NOTE:** This item is displayed, but cannot be monitored.

Monitor Item	Condition
VEH SPEED 1	Display the vehicle speed signal received from combination meter by numerical value [Km/h].
VEH SPEED 2	Display the vehicle speed signal received from ABS or VDC or TCM by numerical value [Km/h].
DOOR STAT-DR	Indicates [LOCK/READY/UNLOCK] condition of driver side door status.
DOOR STAT-AS	Indicates [LOCK/READY/UNLOCK] condition of passenger side door status.
ID OK FLAG	Indicates [SET/RESET] condition of key ID.
PRMT ENG STRT	Indicates [SET/RESET] condition of engine start possibility.
PRMT RKE STRT	**NOTE:** This item is displayed, but cannot be monitored.
KEY SW -SLOT	Indicates [ON/OFF] condition of key slot.
TRNK/HAT MNTR	Indicates [ON/OFF] condition of trunk lid.
RKE-LOCK	Indicates [ON/OFF] condition of LOCK signal from Intelligent Key.
RKE-UNLOCK	Indicates [ON/OFF] condition of UNLOCK signal from Intelligent Key.
RKE-TR/BD	Indicates [ON/OFF] condition of TRUNK OPEN signal from Intelligent Key.
RKE-PANIC	Indicates [ON/OFF] condition of PANIC button of Intelligent Key.
RKE-P/W OPEN	Indicates [ON/OFF] condition of P/W DOWN signal from Intelligent Key.
RKE-MODE CHG	Indicates [ON/OFF] condition of MODE CHANGE signal from Intelligent Key.
RKE OPE COUN1	When remote keyless entry receiver receives the signal transmitted while operating on Intelligent Key, the numerical value start changing.
RKE OPE COUN2	**NOTE:** This item is displayed, but cannot be monitored.

*1: It is displayed but does not operate on M/T models.

*2: OFF is displayed when brake pedal is depressed while brake switch power supply is OFF.

ACTIVE TEST

Test item	Description
BATTERY SAVER	This test is able to check interior room lamp operation. The interior room lamp is activated after “ON” on CONSULT screen is touched.
PW REMOTO DOWN SET	This test is able to check power window down operation. The power window down is activated after “ON” on CONSULT screen is touched.
OUTSIDE BUZZER	This test is able to check Intelligent Key warning buzzer operation. The Intelligent Key warning buzzer is activated after “ON” on CONSULT screen is touched.
INSIDE BUZZER	This test is able to check warning chime in combination meter operation. • Take away warning chime sounds when “TAKE OUT” on CONSULT screen is touched. • Key warning chime sounds when “KEY” on CONSULT screen is touched. • OFF position warning chime sounds when “KNOB” on CONSULT screen is touched.
INDICATOR	This test is able to check warning lamp operation. • “KEY” Warning lamp illuminates when “KEY ON” on CONSULT screen is touched. • “KEY” Warning lamp blinks when “KEY IND” on CONSULT screen is touched.
INT LAMP	This test is able to check interior room lamp operation. The interior room lamp is activated after “ON” on CONSULT screen is touched.
LCD	This test is able to check meter display information • Engine start information displays when “BP N” on CONSULT screen is touched. • Engine start information displays when “BP I” on CONSULT screen is touched. • Key ID warning displays when “ID NG” on CONSULT screen is touched. • ROTAT: This item is displayed, but cannot b monitored. • P position warning displays when “SFT P” on CONSULT screen is touched. • Intelligent Key insert information displays when “INSRT” on CONSULT screen is touched. • Intelligent Key low battery warning displays when “BATT” on CONSULT screen is touched. • Take away through window warning displays when “NO KY” on CONSULT screen is touched. • Take away warning display when “OUTKEY” on CONSULT screen is touched. • OFF position warning display when “LK WN” on CONSULT screen is touched.

Test item	Description
TRUNK/GLASS HATCH	This test is able to check trunk lid opener actuator open operation. This actuator opens when “OPEN” on CONSULT screen is touched.
FLASHER	This test is able to check security hazard lamp operation. The hazard lamps are activated after “LH/RH/OFF” on CONSULT screen is touched.
HORN	This test is able to check horn operation. The horn is activated after “ON” on CONSULT screen is touched.
P RANGE	This test is able to check A/T shift selector power supply A/T shift selector power is supplied when “ON” on CONSULT screen is touched.
ENGINE SW ILLUMI	This test is able to check push-ignition switch illumination operation. Push-ignition switch illumination illuminates when “ON” on CONSULT screen is touched.
LOCK INDICATOR	This test is able to check LOCK indicator in push-ignition switch operation. LOCK indicator in push-ignition switch illuminates when “ON” on CONSULT screen is touched.
ACC INDICATOR	This test is able to check ACC indicator in push-ignition switch operation. ACC indicator in push-ignition switch illuminates when “ON” on CONSULT screen is touched.
IGNITION ON IND	This test is able to check on indicator in push-ignition switch operation. ON indicator in push-ignition switch illuminates when “ON” on CONSULT screen is touched.
KEY SLOT ILLUMI	This test is able to check key slot illumination operation. Key slot illumination blinks when “ON” on CONSULT screen is touched.
TRUNK/BACK DOOR	This test is able to check trunk lid opener actuator open operation. This actuator opens when “OPEN” on CONSULT screen is touched.

TRUNK

TRUNK : CONSULT Function (BCM - TRUNK)

INFOID:0000000008160537

BCM CONSULT FUNCTION

CONSULT performs the following functions via CAN communication with BCM.

Diagnosis mode	Function Description
DATA MONITOR	The BCM input/output signals are displayed.

DATA MONITOR

NOTE:

The following table includes information (items) inapplicable to this vehicle. For information (items) applicable to this vehicle, refer to CONSULT display items.

Monitor Item	Contents
PUSH SW	Indicates [ON/OFF] condition of push switch.
UNLK SEN -DR	Indicates [ON/OFF] condition of unlock sensor.
VEH SPEED 1	Indicates [Km/h] condition of vehicle speed signal from combination meter.
KEY CYL SW-TR	**NOTE:** This item is displayed, but cannot be monitored.
TR CANCEL SW	Indicates [ON/OFF] condition of trunk lid opener cancel switch.
TR/BD OPEN SW	Indicates [ON/OFF] condition of trunk lid opener switch.
TRNK/HAT MNTR	Indicates [ON/OFF] condition of trunk room lamp switch.
RKE-TR/BD	Indicates [ON/OFF] condition of trunk open signal from Intelligent Key remote controller button.
TRUNK/GLASS HATCH	This test is able to check trunk lid opener actuator open operation.

ACTIVE TEST

Test item	Description
TRUNK/GLASS HATCH	This test is able to check trunk lid opener actuator open operation. This actuator opens when “OPEN” on CONSULT screen is touched.

DTC/CIRCUIT DIAGNOSIS

U1000 CAN COMM CIRCUIT

Description

INFOID:0000000008160538

CAN (Controller Area Network) is a serial communication line for real time applications. It is an on-vehicle multiplex communication line with high data communication speed and excellent error detection ability. Modern vehicle is equipped with many electronic control unit, and each control unit shares information and links with other control units during operation (not independent). In CAN communication, control units are connected with 2 communication lines (CAN H-line, CAN L-line) allowing a high rate of information transmission with less wiring. Each control unit transmits/receives data but selectively reads required data only.
CAN Communication Signal Chart. Refer to LAN-25, "CAN System Specification Chart".

DTC Logic

INFOID:0000000008160539

DTC DETECTION LOGIC

DTC	CONSULT display description	DTC Detection Condition	Possible cause
U1000	CAN COMM CIRCUIT	When BCM cannot communicate CAN communication signal continuously for 2 seconds or more.	CAN communication system

Diagnosis Procedure

INFOID:0000000008160540

1. PERFORM SELF DIAGNOSTIC

1. Turn ignition switch ON and wait for 2 seconds or more.
2. Check “Self Diagnostic Result”.

Is “CAN COMM CIRCUIT” displayed?

YES >> Refer to LAN-16, "Trouble Diagnosis Flow Chart".
NO >> Refer to GI-43, "Intermittent Incident".

U1010 CONTROL UNIT (CAN)

DTC Logic

INFOID:0000000008160541

DTC DETECTION LOGIC

DTC	CONSULT display description	DTC Detection Condition	Possible cause
U1010	CONTROL UNIT (CAN)	BCM detected internal CAN communication circuit malfunction.	BCM

Diagnosis Procedure

INFOID:0000000008160542

1. REPLACE BCM

When DTC [U1010] is detected, replace BCM.

>> Replace BCM. Refer to BCS-79, "Removal and Installation"

Special Repair Requirement

INFOID:0000000008160543

1. REQUIRED WORK WHEN REPLACING BCM

Initialize control unit using CONSULT.

>> INSPECTION END

B2621 INSIDE ANTENNA

Description

INFOID:0000000008160544

Detects whether Intelligent Key is inside the vehicle.
Installed in the instrument center.

DTC Logic

INFOID:0000000008160545

DTC DETECTION LOGIC

DTC	CONSULT display description	DTC detecting condition	Possible cause
B2621	INSIDE ANTENNA	An excessive high or low voltage from inside antenna is sent to BCM.	• Inside key antenna (instrument center) • Between BCM ～ Inside key antenna (instrument center)

DTC CONFIRMATION PROCEDURE

1. PERFORM DTC CONFIRMATION PROCEDURE

1. Perform inside key antenna (“INSIDE ANT DIAGNOSIS”) on “Work Support” of “INTELLIGENT KEY”.
2. Perform “INTELLIGENT KEY” Self Diagnostic Result.

Is inside key antenna DTC detected?

YES >> Refer to DLK-55, "Diagnosis Procedure".
NO >> Inside key antenna (instrument center) is OK.

Diagnosis Procedure

INFOID:0000000008160546

1. CHECK INSIDE KEY ANTENNA INPUT SIGNAL 1

1. Turn ignition switch OFF.
2. Check signal between BCM harness connector and ground using oscilloscope.

(+) BCM Connector	(+) BCM Terminal	(–)	Condition	Signal (Reference value)
Instrument center	M122	78, 79	Ground	Place Intelligent Key inside the vehicle.	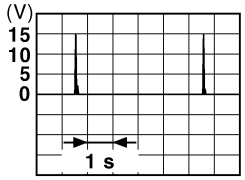 JMKIA0062GB
			Place Intelligent Key outside the vehicle.	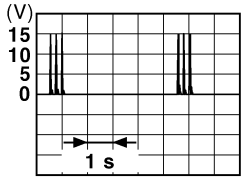 JMKIA0063GB

Is the inspection result normal?

YES >> GO TO 4.
NO >> GO TO 2.

2. CHECK INSIDE KEY ANTENNA CIRCUIT

1. Disconnect BCM connector and inside key antenna (instrument center) connector.

2. Check continuity between BCM harness connector and inside key antenna (instrument center) harness connector.

BCM		Inside key antenna (instrument center)		Continuity
Connector	Terminal	Connector	Terminal	
M122	78	M131	2	Existed
	79		1	

3. Check continuity between BCM harness connector and ground.

BCM		Ground	Continuity
Connector	Terminal		
M122	78		Not existed
	79		

Is the inspection result normal?

YES >> GO TO 3.
NO >> Repair or replace harness.

3. CHECK INSIDE KEY ANTENNA INPUT SIGNAL 2

1. Replace inside key antenna (instrument center). (New antenna or other antenna)
2. Connect BCM connector and inside key antenna (instrument center) connector.
3. Check signal between BCM harness connector and ground using oscilloscope.

(+)			(–)	Condition	Signal (Reference value)
BCM					
Connector		Terminal			
Instrument center	M122	78, 79	Ground	Place Intelligent Key inside the vehicle.	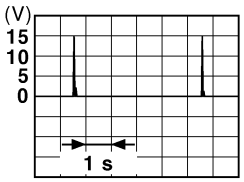 JMKIA0062GB
				Place Intelligent Key outside the vehicle.	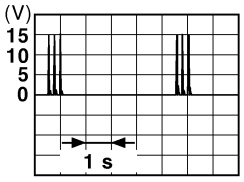 JMKIA0063GB

Is the inspection result normal?

YES >> Replace inside key antenna (instrument center). Refer to DLK-218, "INSTRUMENT CENTER : Removal and Installation".
NO >> Replace BCM. Refer to BCS-79, "Removal and Installation".

4. CHECK INTERMITTENT INCIDENT

Refer to GI-43, "Intermittent Incident".

>> INSPECTION END

B2622 INSIDE ANTENNA

Description

INFOID:0000000008160547

Detects whether Intelligent Key is inside the vehicle.
Installed in the console.

DTC Logic

INFOID:0000000008160548

DTC DETECTION LOGIC

DTC	CONSULT display description	DTC detecting condition	Possible cause
B2622	INSIDE ANTENNA	An excessive high or low voltage from inside antenna is sent to BCM.	• Inside key antenna (console) • Between BCM ～ Inside key antenna (console)

DTC CONFIRMATION PROCEDURE

1. PERFORM DTC CONFIRMATION PROCEDURE

1. Perform inside key antenna (“INSIDE ANT DIAGNOSIS”) on “Work Support” of “INTELLIGENT KEY”.
2. Perform “INTELLIGENT KEY” Self Diagnostic Result.

Is inside key antenna DTC detected?

YES >> Refer to DLK-57, "Diagnosis Procedure".
NO >> Inside key antenna (console) is OK.

Diagnosis Procedure

INFOID:0000000008160549

1. CHECK INSIDE KEY ANTENNA INPUT SIGNAL 1

1. Turn ignition switch OFF.
2. Check signal between BCM harness connector and ground using oscilloscope.

(+) BCM Connector	(+) BCM Terminal	(–)	Condition	Signal (Reference value)
Console	M122	72, 73	Ground	Place Intelligent Key inside the vehicle.	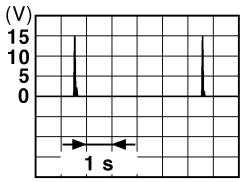 JMKIA0062GB
				Place Intelligent Key outside the vehicle.	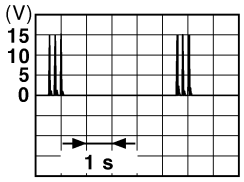 JMKIA0063GB

Is the inspection result normal?

YES >> GO TO 4.
NO >> GO TO 2.

2. CHECK INSIDE KEY ANTENNA CIRCUIT

1. Disconnect BCM connector and inside key antenna (console) connector.
2. Check continuity between BCM harness connector and inside key antenna (console) harness connector.

BCM		Inside key antenna (console)		Continuity
Connector	Terminal	Connector	Terminal	
M122	72	M146	2	Existed
	73		1	

3. Check continuity between BCM harness connector and ground.

BCM		Ground	Continuity
Connector	Terminal		
M122	72		Not existed
	73		

Is the inspection result normal?

YES >> GO TO 3.
NO >> Repair or replace harness.

3. CHECK INSIDE KEY ANTENNA INPUT SIGNAL 2

1. Replace inside key antenna (console). (New antenna or other antenna)
2. Connect BCM connector and inside key antenna (console) connector.
3. Check signal between BCM harness connector and ground using oscilloscope.

(+)			(–)	Condition	Signal (Reference value)
BCM					
Connector		Terminal			
Console	M122	72, 73	Ground	Place Intelligent Key inside the vehicle.	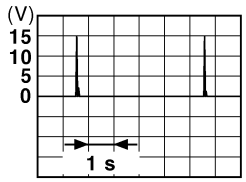 JMKIA0062GB
				Place Intelligent Key outside the vehicle.	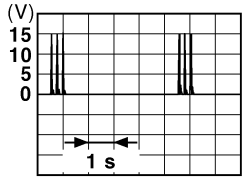 JMKIA0063GB

Is the inspection result normal?

YES >> Replace inside key antenna (console). Refer to DLK-218, "CONSOLE : Removal and Installation".
NO >> Replace BCM. Refer to BCS-79, "Removal and Installation".

4. CHECK INTERMITTENT INCIDENT

Refer to GI-43, "Intermittent Incident".

>> INSPECTION END

B2623 INSIDE ANTENNA

Description

INFOID:0000000008160550

Detects whether Intelligent Key is inside the vehicle.
Installed in the trunk room.

DTC Logic

INFOID:0000000008160551

DTC DETECTION LOGIC

DTC	CONSULT display description	DTC detecting condition	Possible cause
B2623	INSIDE ANTENNA	An excessive high or low voltage from inside antenna is sent to BCM.	• Inside key antenna (trunk room) • Between BCM – Inside key antenna (trunk room)

DTC CONFIRMATION PROCEDURE

1. PERFORM DTC CONFIRMATION PROCEDURE

1. Perform inside key antenna (“INSIDE ANT DIAGNOSIS”) on “Work Support” of “INTELLIGENT KEY”.
2. Perform “INTELLIGENT KEY” Self Diagnostic Result.

Is inside key antenna DTC detected?

YES >> Refer to DLK-59, "Diagnosis Procedure".
NO >> Inside key antenna (trunk room) is OK.

Diagnosis Procedure

INFOID:0000000008160552

1. CHECK INSIDE KEY ANTENNA INPUT SIGNAL 1

1. Turn ignition switch OFF.
2. Check signal between BCM harness connector and ground using oscilloscope.

(+) BCM Connector	(+) BCM Terminal	(–)	Condition	Signal (Reference value)
Trunk room	M121	34, 35	Ground	Place Intelligent Key inside the vehicle.	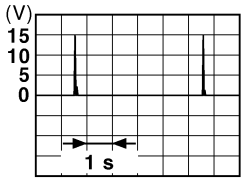 JMKIA0062GB
				Place Intelligent Key outside the vehicle.	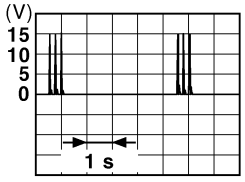 JMKIA0063GB

Is the inspection result normal?

YES >> GO TO 4.
NO >> GO TO 2.

2. CHECK INSIDE KEY ANTENNA CIRCUIT

1. Disconnect BCM connector and inside key antenna (trunk room) connector.

2. Check continuity between BCM harness connector and inside key antenna (trunk room) harness connector.

BCM		Inside key antenna (trunk room)		Continuity
Connector	Terminal	Connector	Terminal	
M121	34	B49	2	Existed
	35		1	

3. Check continuity between BCM harness connector and ground.

BCM		Ground	Continuity
Connector	Terminal		
M121	34		Not existed
	35		

Is the inspection result normal?

YES >> GO TO 3.
NO >> Repair or replace harness.

3. CHECK INSIDE KEY ANTENNA INPUT SIGNAL 2

1. Replace inside key antenna (trunk room). (New antenna or other antenna)
2. Connect BCM and inside key antenna (trunk room) connector.
3. Check signal between BCM harness connector and ground using oscilloscope.

(+)			(–)	Condition	Signal (Reference value)
BCM					
Connector		Terminal			
Trunk room	M121	34, 35	Ground	Place Intelligent Key inside the vehicle.	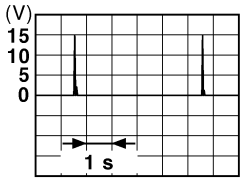 JMKIA0062GB
				Place Intelligent Key outside the vehicle.	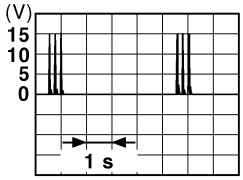 JMKIA0063GB

Is the inspection result normal?

YES >> Replace inside key antenna (trunk room). Refer to DLK-219, "TRUNK ROOM : Removal and Installation".
NO >> Replace BCM. Refer to BCS-79, "Removal and Installation".

4. CHECK INTERMITTENT INCIDENT

Refer to GI-43, "Intermittent Incident".

>> INSPECTION END

POWER SUPPLY AND GROUND CIRCUIT

BCM (BODY CONTROL MODULE)

BCM (BODY CONTROL MODULE) : Diagnosis Procedure

INFOID:0000000008160553

1. CHECK FUSE AND FUSIBLE LINK

Check that the following fuse and fusible link are not blown.

Signal name	Fuse and fusible link No.
Battery power supply	K
	10

Is the fuse fusing?

YES >> Replace the blown fuse or fusible link after repairing the affected circuit if a fuse or fusible link is blown.
NO >> GO TO 2.

2. CHECK POWER SUPPLY CIRCUIT

1. Turn ignition switch OFF.
2. Disconnect BCM connectors.
3. Check voltage between BCM harness connector and ground.

Terminals			Voltage (Approx.)
(+)		(–)	
BCM		Ground	
Connector	Terminal		
M118	1		Battery voltage
M119	11		

Is the measurement value normal?

YES >> GO TO 3.
NO >> Repair harness or connector.

3. CHECK GROUND CIRCUIT

Check continuity between BCM harness connector and ground.

BCM		Ground	Continuity
Connector	Terminal		
M119	13		Existed

Does continuity exist?

YES >> INSPECTION END
NO >> Repair harness or connector.

DOOR SWITCH

Description

INFOID:0000000008160554

Detects door open/close condition.

Component Function Check

INFOID:0000000008160555

1.CHECK FUNCTION

Check (“DOOR SW-DR” or “DOOR SW-AS”) in “Data Monitor” mode using CONSULT.

Monitor item	Condition		Status
DOOR SW-DR	Driver side door	Open	ON
		Closed	OFF
DOOR SW-AS	Passenger side door	Open	ON
		Closed	OFF

Is the inspection result normal?

YES >> Door switch is OK.
NO >> Refer to DLK-62, "Diagnosis Procedure".

Diagnosis Procedure

INFOID:0000000008160556

1.CHECK DOOR SWITCH INPUT SIGNAL

1. Turn ignition switch OFF.
2. Disconnect malfunctioning door switch connector.
3. Check signal between malfunctioning door switch harness connector and ground using oscilloscope.

(+)			(–)	Signal (Reference value)
Door switch				
Connector		Terminal		
Driver side	B16	2	Ground	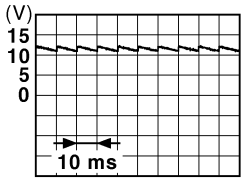 JPMIA0011GB
Passenger side	B216	2		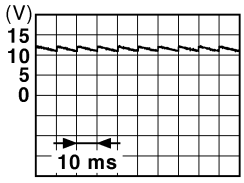 JPMIA0011GB

Is the inspection result normal?

YES >> GO TO 3.
NO >> GO TO 2.

2.CHECK DOOR SWITCH CIRCUIT

1. Disconnect BCM connector.
2. Check continuity between door switch harness connector and BCM harness connector.

Door switch			BCM		Continuity
Connector		Terminal	Connector	Terminal	
Driver side	B16	2	M123	150	Existed
Passenger side	B216			124	

3. Check continuity between door switch harness connector and ground.

Door switch			Ground	Continuity
Connector		Terminal		
Driver side	B16	2		Not existed
Passenger side	B216			

Is the inspection result normal?

YES >> Replace BCM. Refer to BCS-79, "Removal and Installation".
NO >> Repair or replace harness.

3. CHECK DOOR SWITCH

Refer to DLK-63, "Component Inspection".

Is the inspection result normal?

YES >> GO TO 4.
NO >> Replace malfunctioning door switch. Refer to DLK-217, "Removal and Installation".

4. CHECK INTERMITTENT INCIDENT

Refer to GI-43, "Intermittent Incident".

>> INSPECTION END

Component Inspection

INFOID:0000000008160557

1. CHECK DOOR SWITCH

1. Turn ignition switch OFF.
2. Disconnect malfunctioning door switch connector.
3. Check continuity between door switch terminals.

Terminal		Condition		Continuity
Door switch				
2	Ground part of door switch	Door switch	Pressed	Not existed
			Released	Existed

Is the inspection result normal?

YES >> INSPECTION END
NO >> Replace malfunction door switch. Refer to DLK-217, "Removal and Installation".

DOOR LOCK AND UNLOCK SWITCH

DRIVER SIDE

DRIVER SIDE : Description

INFOID:0000000008160558

Transmits door lock/unlock operation to BCM.

DRIVER SIDE : Component Function Check

INFOID:0000000008160559

1.CHECK FUNCTION

Check (“CDL LOCK SW ”, “CDL UNLOCK SW”) in “Data Monitor” mode using CONSULT.

Monitor item	Condition		Status
CDL LOCK SW	Door lock and unlock switch	Lock	ON
		Unlock	OFF
CDL UNLOCK SW		Lock	OFF
		Unlock	ON

Is the inspection result normal?

YES >> Door lock and unlock switch is OK.
NO >> Refer to DLK-64, "DRIVER SIDE : Diagnosis Procedure".

DRIVER SIDE : Diagnosis Procedure

INFOID:0000000008160560

1.CHECK POWER WINDOW SWITCH

1. Turn ignition switch ON.
2. Check power window operation.

Does power window (driver side) operate?

YES >> Replace power window main switch. Refer to PWC-84, "Removal and Installation".
NO >> Refer to PWC-70, "Diagnosis Procedure".

PASSENGER SIDE

PASSENGER SIDE : Description

INFOID:0000000008160561

Transmits door lock/unlock operation to BCM.

PASSENGER SIDE : Component Function Check

INFOID:0000000008160562

1.CHECK FUNCTION

Check (“CDL LOCK SW ”, “CDL UNLOCK SW”) in “Data Monitor” mode using CONSULT.

Monitor item	Condition		Status
CDL LOCK SW	Door lock and unlock switch	Lock	ON
		Unlock	OFF
CDL UNLOCK SW		Lock	OFF
		Unlock	ON

Is the inspection result normal?

YES >> Door lock and unlock switch is OK.
NO >> Refer to DLK-64, "PASSENGER SIDE : Diagnosis Procedure".

PASSENGER SIDE : Diagnosis Procedure

INFOID:0000000008160563

1.CHECK POWER WINDOW SWITCH

1. Turn ignition switch ON.
2. Check passenger side power window operation.

Does power window (passenger side) operate?

YES >> Replace power window sub-switch. Refer to PWC-84, "Removal and Installation".
NO >> Refer to PWC-71, "WHEN POWER WINDOW SUB-SWITCH IS OPERATED : Diagnosis Procedure".

DOOR LOCK ACTUATOR

DRIVER SIDE

DRIVER SIDE : Description

INFOID:0000000008160564

Locks/unlocks the door with the signal from BCM.

DRIVER SIDE : Component Function Check

INFOID:0000000008160565

1. CHECK FUNCTION

1. Use CONSULT to perform Active Test (“DOOR LOCK”).
2. Touch “ALL LCK” or “ALL UNLK” to check that it works normally.

Is the inspection result normal?

YES >> Door lock actuator is OK.
NO >> Refer to DLK-66, "DRIVER SIDE : Diagnosis Procedure".

DRIVER SIDE : Diagnosis Procedure

INFOID:0000000008160566

1. CHECK DOOR LOCK ACTUATOR INPUT SIGNAL

1. Turn ignition switch OFF.
2. Disconnect driver side door lock assembly connector.
3. Check voltage between driver side door lock assembly harness connector and ground.

(+)		(–)	Condition		Voltage (V) (Approx.)
Driver side door lock assembly					
Connector	Terminal				
D15	1	Ground	Door lock and unlock switch	Lock	0 → Battery voltage → 0
	2			Unlock	0 → Battery voltage → 0

Is the inspection result normal?

YES >> Replace driver side door lock assembly. Refer to DLK-208, "DOOR LOCK : Removal and Installation".
NO >> GO TO 2.

2. CHECK DOOR LOCK ACTUATOR CIRCUIT

1. Disconnect BCM connector.
2. Check continuity between BCM harness connector and driver side door lock assembly harness connector.

BCM		Driver side door lock assembly		Continuity
Connector	Terminal	Connector	Terminal	
M119	8	D15	1	Existed
	9		2	

3. Check continuity between BCM harness connector and ground.

BCM		Ground	Continuity
Connector	Terminal		
M119	8		Not existed
	9		

Is the inspection result normal?

YES >> Replace BCM. Refer to BCS-79, "Removal and Installation".
NO >> Repair or replace harness.

PASSENGER SIDE

PASSENGER SIDE : Description

INFOID:0000000008160567

Locks/unlocks the door with the signal from BCM.

PASSENGER SIDE : Component Function Check

INFOID:0000000008160568

1. CHECK FUNCTION

1. Use CONSULT to perform Active Test (“DOOR LOCK”).
2. Touch “ALL LCK” or “ALL UNLK” to check that it works normally.

Is the inspection result normal?

YES >> Door lock actuator is OK.
NO >> Refer to DLK-67, "PASSENGER SIDE : Diagnosis Procedure".

PASSENGER SIDE : Diagnosis Procedure

INFOID:0000000008160569

1. CHECK DOOR LOCK ACTUATOR INPUT SIGNAL

1. Turn ignition switch OFF.
2. Disconnect passenger side door lock assembly connector.
3. Check voltage between passenger side door lock assembly harness connector and ground.

(+)		(–)	Condition		Voltage (V) (Approx.)
Passenger side door lock assembly					
Connector	Terminal				
D45	1	Ground	Door lock and unlock switch	Unlock	0 → Battery voltage → 0
	2			Lock	0 → Battery voltage → 0

Is the inspection result normal?

YES >> Replace passenger side door lock assembly. Refer to DLK-208, "DOOR LOCK : Removal and Installation".
NO >> GO TO 2.

2. CHECK DOOR LOCK ACTUATOR CIRCUIT

1. Disconnect BCM connector.
2. Check continuity between BCM harness connector and passenger side door lock assembly harness connector.

BCM		Passenger side door lock assembly		Continuity
Connector	Terminal	Connector	Terminal	
M119	5	D45	1	Existed
	8		2	

3. Check continuity between BCM harness connector and ground.

BCM		Ground	Continuity
Connector	Terminal		
M119	5		Not existed
	8		

Is the inspection result normal?

YES >> Replace BCM. Refer to BCS-79, "Removal and Installation".
NO >> Repair or replace harness.

FUEL LID LOCK ACTUATOR

Description

INFOID:0000000008160570

Locks/unlocks the fuel filler lid with the signal from BCM.

Component Function Check

INFOID:0000000008160571

1.CHECK FUNCTION

1. Use CONSULT to perform Active Test (“DOOR LOCK”).
2. Touch “ALL LOCK” or “ALL UNLOCK” to check that it works normally.

Is the inspection result normal?

YES >> Fuel lid lock actuator is OK.
NO >> Refer to DLK-68, "Diagnosis Procedure".

Diagnosis Procedure

INFOID:0000000008160572

1.CHECK FUEL LID LOCK ACTUATOR INPUT SIGNAL

1. Turn ignition switch OFF.
2. Disconnect fuel lid lock actuator connector.
3. Check voltage between fuel lid lock actuator harness connector and ground.

(+)		(–)	Condition		Voltage (V) (Approx.)
Fuel lid lock actuator					
Connector	Terminal				
B242	1	Ground	Door lock and unlock switch	Unlock	0 → Battery voltage → 0
	2			Lock	0 → Battery voltage → 0

Is the inspection result normal?

YES >> Replace fuel lid lock actuator. Refer to DLK-216, "Removal and Installation".
NO >> GO TO 2.

2.CHECK FUEL LID LOCK ACTUATOR CIRCUIT

1. Disconnect BCM connector.
2. Check continuity between BCM harness connector and fuel lid lock actuator harness connector.

BCM		Fuel lid lock actuator		Continuity
Connector	Terminal	Connector	Terminal	
M119	8	B242	2	Existed
	9		1	

3. Check continuity between BCM harness connector and ground.

BCM		Ground	Continuity
Connector	Terminal		
M119	8	Ground	Not existed
	9		

Is the inspection result normal?

YES >> Replace BCM. Refer to BCS-79, "Removal and Installation".
NO >> Repair or replace harness.

TRUNK LID OPENER ACTUATOR

Description

INFOID:0000000008160573

Performs trunk lid open with signal from BCM.

Component Function Check

INFOID:0000000008160574

1. CHECK TRUNK LID OPENER CANCEL SWITCH

Check trunk lid opener cancel switch position.

Does trunk lid opener cancel switch turn OFF (CANCEL)?

YES >> Turn on trunk lid opener cancel switch.
NO >> GO TO 2.

2. CHECK FUNCTION

1. Use CONSULT to perform Active Test (“TRUNK/GLASS HATCH”).
2. Touch “OPEN” to check that it works normally.

Is the inspection result normal?

YES >> Trunk lid opener actuator is OK.
NO >> Refer to DLK-69, "Diagnosis Procedure".

Diagnosis Procedure

INFOID:0000000008160575

1. CHECK TRUNK LID OPENER ACTUATOR INPUT SIGNAL

1. Turn ignition switch OFF.
2. Disconnect trunk lid lock assembly connector.
3. Check voltage between trunk lid lock assembly harness connector and ground.

(+)		(–)	Condition		Voltage (V) (Approx.)
Trunk lid lock assembly					
Connector	Terminal				
B303	3	Ground	Trunk lid opener switch	Pressed	0 → Battery voltage → 0

Is the inspection result normal?

YES >> GO TO 3.
NO >> GO TO 2.

2. CHECK TRUNK LID OPENER ACTUATOR CIRCUIT

1. Disconnect BCM connector.
2. Check continuity between BCM harness connector and trunk lid lock assembly harness connector.

BCM		Trunk lid lock assembly		Continuity
Connector	Terminal	Connector	Terminal	
M120	23	B303	3	Existed

3. Check continuity between BCM harness connector and ground.

BCM		Ground	Continuity
Connector	Terminal		
M120	23		Not existed

Is the inspection result normal?

YES >> Replace BCM. Refer to BCS-79, "Removal and Installation".
NO >> Repair or replace harness.

3. CHECK TRUNK LID OPENER ACTUATOR GROUND CIRCUIT

Check continuity between trunk lid lock assembly harness connector and ground.

Trunk lid lock assembly		Ground	Continuity
Connector	Terminal		
B303	2		Existed

Is the inspection result normal?

YES >> Replace trunk lid lock assembly. Refer to DLK-215, "TRUNK LID LOCK : Removal and Installation".

NO >> Repair or replace harness.

TRUNK ROOM LAMP SWITCH

Description

INFOID:0000000008160576

Detects trunk open/close condition.

Component Function Check

INFOID:0000000008160577

1.CHECK FUNCTION

Check (“TRNK/HAT MNTR”) in “Data Monitor” mode using CONSULT.

Monitor item	Condition		Status
TRNK/HAT MNTR	Trunk lid	Open	ON
		Closed	OFF

Is the inspection result normal?

YES >> Trunk room lamp switch is OK.
NO >> Refer to DLK-71, "Diagnosis Procedure".

Diagnosis Procedure

INFOID:0000000008160578

1.CHECK TRUNK ROOM LAMP SWITCH INPUT SIGNAL

1. Turn ignition switch OFF.
2. Disconnect trunk lid lock assembly connector.
3. Check signal between trunk lid lock assembly harness connector and ground using oscilloscope.

(+)		(–)	Signal (Reference value)
Trunk lid lock assembly			
Connector	Terminal		
B303	1	Ground	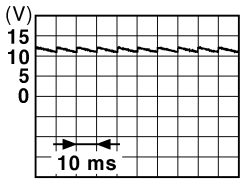 JPMIA0011GB

Is the inspection result normal?

YES >> GO TO 3.
NO >> GO TO 2.

2.CHECK TRUNK ROOM LAMP SWITCH CIRCUIT

1. Disconnect BCM connector.
2. Check continuity between BCM harness connector and trunk lid lock assembly harness connector.

BCM		Trunk lid lock assembly		Continuity
Connector	Terminal	Connector	Terminal	
M121	50	B303	1	Existed

3. Check continuity between BCM harness connector and ground.

BCM		Ground	Continuity
Connector	Terminal		
M121	50		Not existed

Is the inspection result normal?

YES >> Replace BCM. Refer to BCS-79, "Removal and Installation".

NO >> Repair harness or connector.

3. CHECK TRUNK ROOM LAMP SWITCH GROUND CIRCUIT

Check continuity between trunk lid lock assembly harness connector and ground.

Trunk lid lock assembly		Ground	Continuity
Connector	Terminal		
B303	2		Existed

Is the inspection result normal?

YES >> GO TO 4.
NO >> Repair or replace harness.

4. CHECK TRUNK ROOM LAMP SWITCH

Refer to DLK-72, "Component Inspection".

Is the inspection result normal?

YES >> GO TO 5.
NO >> Replace trunk lid lock assembly. Refer to DLK-201, "TRUNK LID ASSEMBLY : Removal and Installation".

5. CHECK INTERMITTENT INCIDENT

Refer to GI-43, "Intermittent Incident".

>> INSPECTION END

Component Inspection

INFOID:0000000008160579

1. CHECK TRUNK ROOM LAMP SWITCH

1. Turn ignition switch OFF.
2. Disconnect trunk lid lock assembly connector.
3. Check continuity between trunk lid lock assembly terminals.

Terminal		Condition		Continuity
Trunk lid lock assembly				
1	2	Trunk lid	Open	Existed
			Closed	Not existed

Is the inspection result normal?

YES >> INSPECTION END
NO >> Replace trunk lid lock assembly. Refer to DLK-201, "TRUNK LID ASSEMBLY : Removal and Installation".

DOOR KEY CYLINDER SWITCH

Description

INFOID:0000000008160580

Power window main switch detects condition of the door key cylinder switch and transmits to BCM as the LOCK or UNLOCK signals.

Component Function Check

INFOID:0000000008160581

1. CHECK DOOR KEY CYLINDER SWITCH INPUT SIGNAL

Check (“KEY CYL LK-SW”, “KEY CYL UN-SW”) in “Data Monitor” mode using CONSULT.

Monitor item	Condition		Status
KEY CYL LK-SW	Driver side door key cylinder	Lock	ON
		Neutral / Unlock	OFF
KEY CYL UN-SW		Unlock	ON
		Neutral / Lock	OFF

Is the inspection result normal?

YES >> Door key cylinder switch is OK.
NO >> Refer to DLK-73, "Diagnosis Procedure".

Diagnosis Procedure

INFOID:0000000008160582

1. CHECK DOOR KEY CYLINDER SWITCH INPUT SIGNAL

1. Turn ignition switch OFF.
2. Disconnect driver side door lock assembly connector.
3. Check voltage between driver side door lock assembly harness connector and ground.

(+)		(–)	Voltage (V) (Approx.)
Driver side door lock assembly			
Connector	Terminal		
D15	5	Ground	5
	6		

Is the inspection result normal?

YES >> GO TO 3.
NO >> GO TO 2.

2. CHECK DOOR KEY CYLINDER SWITCH SIGNAL CIRCUIT

1. Disconnect power window main switch connector.
2. Check continuity between power window main switch harness connector and driver side door lock assembly harness connector.

Power window main switch		Driver side door lock assembly		Continuity
Connector	Terminal	Connector	Terminal	
D8	6	D15	6	Existed
	7		5	

3. Check continuity between power window main switch harness connector and ground.

Power window main switch		Ground	Continuity
Connector	Terminal		
D8	6		Not existed
	7		

Is the inspection result normal?

YES >> Replace power window main switch. Refer to PWC-84, "Removal and Installation".
NO >> Repair or replace harness.

3. CHECK DOOR KEY CYLINDER SWITCH GROUND CIRCUIT

Check continuity between driver side door lock assembly harness connector and ground.

Driver side door lock assembly		Ground	Continuity
Connector	Terminal		
D15	4		Existed

Is the inspection result normal?

YES >> GO TO 4.
NO >> Repair or replace harness.

4. CHECK DOOR KEY CYLINDER SWITCH

Refer to DLK-74, "Component Inspection".

Is the inspection result normal?

YES >> GO TO 5.
NO >> Replace driver side door lock assembly. Refer to DLK-208, "DOOR LOCK : Removal and Installation".

5. CHECK INTERMITTENT INCIDENT

Refer to GI-43, "Intermittent Incident".

>> INSPECTION END

Component Inspection

INFOID:0000000008160583

COMPONENT INSPECTION

1. CHECK DOOR KEY CYLINDER SWITCH

1. Turn ignition switch OFF.
2. Disconnect driver side door lock assembly terminal.
3. Check continuity between driver side door lock assembly terminals.

Driver side door lock assembly		Condition		Continuity
Terminal				
5	4	Driver side door key cylinder	Unlock	Existed
			Neutral / Lock	Not existed
6			Lock	Existed
			Neutral / Unlock	Not existed

Is the inspection result normal?

YES >> INSPECTION END
NO >> Replace driver side door lock assembly. Refer to DLK-208, "DOOR LOCK : Removal and Installation".

REMOTE KEYLESS ENTRY RECEIVER

Description

INFOID:0000000008160584

Receives Intelligent Key operation and transmits to BCM.

Component Function Check

INFOID:0000000008160585

1.CHECK FUNCTION

Check (“RKE OPE COUN1”) in “Data Monitor” mode using CONSULT.

Monitor item	Condition
RKE OPE COUN1	Checks whether value changes when operating Intelligent Key.

Is the inspection result normal?

YES >> Remote keyless entry receiver is OK.
NO >> Refer to DLK-75, "Diagnosis Procedure".

Diagnosis Procedure

INFOID:0000000008160586

1.CHECK REMOTE KEYLESS ENTRY RECEIVER POWER SUPPLY

1. Turn ignition switch OFF.
2. Disconnect remote keyless entry receiver connector.
3. Check voltage between remote keyless entry receiver harness connector and ground.

(+)		(–)	Voltage (V) (Approx.)
Remote keyless entry receiver			
Connector	Terminal		
M104	4	Ground	12

Is the inspection result normal?

YES >> GO TO 3.
NO >> GO TO 2.

2.CHECK REMOTE KEYLESS ENTRY RECEIVER POWER SUPPLYCIRCUIT

1. Disconnect BCM connector.
2. Check continuity between BCM harness connector and remote keyless entry receiver harness connector.

BCM		Remote keyless entry receiver		Continuity
Connector	Terminal	Connector	Terminal	
M122	103	M104	4	Existed

3. Check continuity between BCM harness connector and ground.

BCM		Ground	Continuity
Connector	Terminal		
M122	103		Not existed

Is the inspection result normal?

YES >> Replace BCM. Refer to BCS-79, "Removal and Installation".
NO >> Repair or replace harness.

3.CHECK REMOTE KEYLESS ENTRY RECEIVER GROUND CIRCUIT

1. Disconnect BCM connector.
2. Check continuity between BCM harness connector and remote keyless entry receiver harness connector.

BCM		Remote keyless entry receiver		Continuity
Connector	Terminal	Connector	Terminal	
M123	137	M104	1	Existed

3. Check continuity between BCM harness connector and ground.

BCM		Ground	Continuity
Connector	Terminal		
M123	137		Not existed

Is the inspection result normal?

YES >> GO TO 4.
NO >> Repair or replace harness.

4. CHECK BCM SIGNAL

1. Reconnect BCM connector.
2. Check voltage between remote keyless entry receiver harness connector and ground.

(+)		(–)	Voltage (V) (Approx.)
Remote keyless entry receiver			
Connector	Terminal		
M104	2	Ground	12

Is the inspection result normal?

YES >> GO TO 6.
NO >> GO TO 5.

5. CHECK REMOTE KEYLESS ENTRY RECEIVER CIRCUIT

1. Disconnect BCM connector.
2. Check continuity between BCM harness connector and remote keyless entry receiver harness connector.

BCM		Remote keyless entry receiver		Continuity
Connector	Terminal	Connector	Terminal	
M122	83	M104	2	Existed

3. Check continuity between BCM harness connector and ground.

BCM		Ground	Continuity
Connector	Terminal		
M122	83		Not existed

Is the inspection result normal?

YES >> Replace BCM. Refer to BCS-79, "Removal and Installation".
NO >> Repair or replace harness.

6. CHECK REMOTE KEYLESS ENTRY RECEIVER SIGNAL

1. Reconnect keyless entry receiver connector.
2. Check signal between remote keyless entry receiver harness connector and ground using oscilloscope.

(+)		(–)	Condition	Signal (Reference value)
Remote keyless entry receiver				
Connector	Terminal			
M104	2	Ground	During waiting	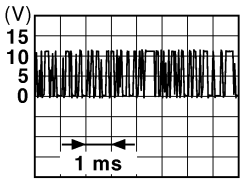 JMKIA0064GB
			When operating either button on the Intelligent Key	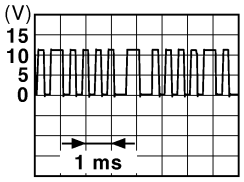 JMKIA0065GB

Is the inspection result normal?

YES >> GO TO 7.

NO >> Replace remote keyless entry receiver. Refer to DLK-226, "Removal and Installation".

7. CHECK INTERMITTENT INCIDENT

Refer to GI-43, "Intermittent Incident".

>> INSPECTION END

TRUNK LID OPENER SWITCH

Description

INFOID:0000000008160587

Transmits trunk lid open signal to BCM.

Component Function Check

INFOID:0000000008160588

1.CHECK TRUNK LID OPENER CANCEL SWITCH

Check trunk lid opener cancel switch position.

Does trunk lid opener cancel switch turn ON (CANCEL)?

YES >> Turn off trunk lid opener cancel switch.
NO >> GO TO 2.

2.CHECK FUNCTION

Check (“TR/BD OPEN SW”) in “Data Monitor” mode using CONSULT.

Monitor item	Condition		Status
TR/BD OPEN SW	Trunk lid opener switch	Pressed	ON
		Released	OFF

Is the inspection result normal?

YES >> Trunk lid opener switch is OK.
NO >> Refer to DLK-78, "Diagnosis Procedure".

Diagnosis Procedure

INFOID:0000000008160589

1.CHECK TRUNK LID OPENER SWITCH INPUT SIGNAL

1. Turn ignition switch OFF.
2. Disconnect trunk lid opener switch connector.
3. Check signal between trunk lid opener switch harness connector and ground using oscilloscope.

(+)		(–)	Signal (Reference value)
Trunk lid opener switch			
Connector	Terminal		
M20	1	Ground	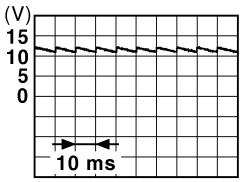 JPMIA0011GB

Is the inspection result normal?

YES >> GO TO 3.
NO >> GO TO 2.

2.CHECK TRUNK LID OPENER SWITCH CIRCUIT

1. Disconnect BCM connector.
2. Check continuity between BCM harness connector and trunk lid opener switch harness connector.

BCM		Trunk lid opener switch		Continuity
Connector	Terminal	Connector	Terminal	
M121	67	M20	1	Existed

3. Check continuity between BCM harness connector and ground.

BCM		Ground	Continuity
Connector	Terminal		
M121	67		Not existed

Is the inspection result normal?

YES >> Replace BCM. Refer to BCS-79, "Removal and Installation".
NO >> Repair harness or connector.

3. CHECK TRUNK LID OPENER SWITCH GROUND CIRCUIT

Check continuity between trunk lid opener switch harness connector and ground.

Trunk lid opener switch		Ground	Continuity
Connector	Terminal		
M20	2		Existed

Is the inspection result normal?

YES >> GO TO 4.
NO >> Repair or replace harness.

4. CHECK TRUNK LID OPENER SWITCH

Refer to DLK-79, "Component Inspection".

Is the inspection result normal?

YES >> GO TO 5.
NO >> Replace trunk lid opener switch. Refer to DLK-224, "Removal and Installation".

5. CHECK INTERMITTENT INCIDENT

Refer to GI-43, "Intermittent Incident".

>> INSPECTION END

Component Inspection

INFOID:0000000008160590

1. CHECK TRUNK LID OPENER SWITCH

1. Turn ignition switch OFF.
2. Disconnect trunk lid opener switch connector.
3. Check continuity between trunk lid opener switch terminals.

Terminal		Condition		Continuity
Trunk lid opener switch				
1	2	Trunk lid opener switch	Pressed	Existed
			Released	Not existed

Is the inspection result normal?

YES >> INSPECTION END
NO >> Replace trunk lid opener switch. Refer to DLK-224, "Removal and Installation".

TRUNK LID OPENER REQUEST SWITCH

Description

INFOID:0000000008160591

Performs trunk lid open request when it is pressed.

Component Function Check

INFOID:0000000008160592

1.CHECK TRUNK LID OPENER CANCEL SWITCH

Check trunk lid opener cancel switch position.

Does trunk lid opener cancel switch turn ON (CANCEL)?

YES >> Turn off trunk lid opener cancel switch.
NO >> GO TO 2.

2.CHECK FUNCTION

Check (“REQSW-BD/TR”) in “Data Monitor” mode using CONSULT.

Monitor item	Condition		Status
REQSW-BD/TR	Trunk lid opener request switch	Pressed	ON
		Released	OFF

Is the inspection result normal?

YES >> Trunk lid opener request switch is OK.
NO >> Refer to DLK-80, "Diagnosis Procedure".

Diagnosis Procedure

INFOID:0000000008160593

1.CHECK TRUNK LID OPENER REQUEST SWITCH INPUT SIGNAL

1. Turn ignition switch OFF.
2. Disconnect rear combination lamp LH connector.
3. Check signal between rear combination lamp LH harness connector and ground using oscilloscope.

(+)		(–)	Signal (Reference value)
Rear combination lamp LH			
Connector	Terminal		
B60	5	Ground	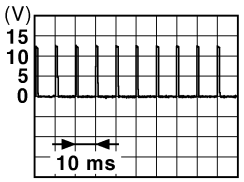 JPMIA0016GB

Is the inspection result normal?

YES >> GO TO 3.
NO >> GO TO 2.

2.CHECK TRUNK LID OPENER REQUEST SWITCH CIRCUIT

1. Disconnect BCM connector.
2. Check continuity between BCM harness connector and rear combination lamp LH harness connector.

BCM		Rear combination lamp LH		Continuity
Connector	Terminal	Connector	Terminal	
M121	61	B60	5	Existed

3. Check continuity between BCM harness connector and ground.

BCM		Ground	Continuity
Connector	Terminal		
M121	61		Not existed

Is the inspection result normal?

YES >> Replace BCM. Refer to BCS-79, "Removal and Installation".
NO >> Repair harness or connector.

3. CHECK TRUNK LID OPENER REQUEST SWITCH GROUND CIRCUIT

Check continuity between rear combination lamp LH harness connector and ground.

Rear combination lamp LH		Ground	Continuity
Connector	Terminal		
B60	3		Existed

Is the inspection result normal?

YES >> GO TO 4.
NO >> Repair or replace harness.

4. CHECK TRUNK LID OPENER REQUEST SWITCH

Refer to DLK-81, "Component Inspection".

Is the inspection result normal?

YES >> GO TO 5.
NO >> Replace trunk lid opener request switch. Refer to DLK-223, "Removal and Installation".

5. CHECK INTERMITTENT INCIDENT

Refer to GI-43, "Intermittent Incident".

>> INSPECTION END

Component Inspection

INFOID:0000000008160594

1. CHECK TRUNK LID OPENER REQUEST SWITCH

1. Turn ignition switch OFF.
2. Disconnect rear combination lamp LH connector.
3. Check continuity between rear combination lamp LH terminals.

Rear combination lamp LH		Condition		Continuity
Terminal				
3	5	Trunk lid opener request switch	Pressed	Existed
			Released	Not existed

Is the inspection result normal?

YES >> INSPECTION END
NO >> Replace trunk lid opener request switch. Refer to DLK-223, "Removal and Installation".

TRUNK LID OPENER CANCEL SWITCH

Description

INFOID:0000000008160595

Cancels trunk lid open operation.

Component Function Check

INFOID:0000000008160596

1.CHECK FUNCTION

Check (“TR CANCEL SW”) in “Data Monitor” mode using CONSULT.

Monitor item	Condition		Status
TR CANCEL SW	Trunk lid opener cancel switch	ON	ON
		OFF (Cancel)	OFF

Is the inspection result normal?

YES >> Trunk lid opener cancel switch is OK.
NO >> Refer to DLK-82, "Diagnosis Procedure".

Diagnosis Procedure

INFOID:0000000008160597

1.CHECK TRUNK LID OPENER CANCEL SWITCH INPUT SIGNAL

1. Turn ignition switch OFF.
2. Disconnect trunk lid opener cancel switch connector.
3. Check signal between trunk lid opener cancel switch harness connector and ground using oscilloscope.

(+)		(–)	Signal (Reference value)
Trunk lid opener cancel switch			
Connector	Terminal		
M105	1	Ground	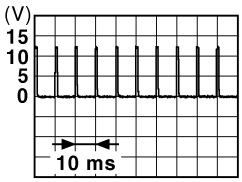 JPMIA0012GB

Is the inspection result normal?

YES >> GO TO 3.
NO >> GO TO 2.

2.CHECK TRUNK LID OPENER CANCEL SWITCH CIRCUIT

1. Disconnect BCM connector.
2. Check continuity between BCM harness connector and trunk lid opener cancel switch harness connector.

BCM		Trunk lid opener cancel switch		Continuity
Connector	Terminal	Connector	Terminal	
M123	129	M105	1	Existed

3. Check continuity between BCM harness connector and ground.

BCM		Ground	Continuity
Connector	Terminal		
M123	129		Not existed

Is the inspection result normal?

YES >> Replace BCM. Refer to BCS-79, "Removal and Installation".

NO >> Repair harness or connector.

3. CHECK TRUNK LID OPENER CANCEL SWITCH GROUND CIRCUIT

Check continuity between trunk lid opener cancel switch harness connector and ground.

Trunk lid opener cancel switch		Ground	Continuity
Connector	Terminal		
M105	2		Existed

Is the inspection result normal?

YES >> GO TO 4.
NO >> Repair or replace harness.

4. CHECK TRUNK LID OPENER CANCEL SWITCH

Refer to DLK-83, "Component Inspection".

Is the inspection result normal?

YES >> GO TO 5.
NO >> Replace trunk lid opener cancel switch. Refer to DLK-225, "Removal and Installation".

5. CHECK INTERMITTENT INCIDENT

Refer to GI-43, "Intermittent Incident".

>> INSPECTION END

Component Inspection

INFOID:0000000008160598

1. CHECK TRUNK LID OPENER CANCEL SWITCH

1. Turn ignition switch OFF.
2. Disconnect trunk lid opener cancel switch connector.
3. Check continuity between trunk lid opener cancel switch terminals.

Trunk lid opener cancel switch		Condition		Continuity
Terminal				
1	2	Trunk lid opener cancel switch	ON	Existed
			OFF (Cancel)	Not existed

Is the inspection result normal?

YES >> INSPECTION END
NO >> Replace trunk lid opener cancel switch. Refer to DLK-225, "Removal and Installation".

DOOR REQUEST SWITCH

Description

INFOID:0000000008160599

Transmits lock/unlock operation to BCM.

Component Function Check

INFOID:0000000008160600

1.CHECK FUNCTION

Check (“REQ SW -DR” or “REQ SW -AS”) in “Data Monitor” mode using CONSULT.

Monitor item	Condition		Status
REQ SW -DR	Driver side door request switch	Pressed	ON
		Released	OFF
REQ SW -AS	Passenger side door request switch	Pressed	ON
		Released	OFF

Is the inspection result normal?

YES >> Door request switch is OK.
NO >> Refer to DLK-84, "Diagnosis Procedure".

Diagnosis Procedure

INFOID:0000000008160601

1.CHECK DOOR REQUEST SWITCH INPUT SIGNAL

1. Turn ignition switch OFF.
2. Disconnect malfunctioning outside handle connector.
3. Check signal between malfunctioning outside handle harness connector and ground using oscilloscope.

(+)			(–)	Signal (Reference value)
Outside handle				
Connector		Terminal		
LH	D13	1	Ground	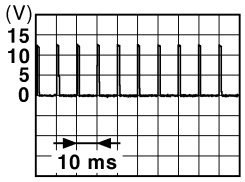 JPMIA0016GB
RH	D43			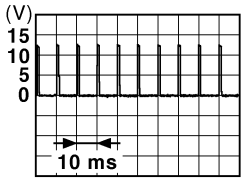 JPMIA0016GB

Is the inspection result normal?

YES >> GO TO 3.
NO >> GO TO 2.

2.CHECK DOOR REQUEST SWITCH CIRCUIT

1. Disconnect BCM connector.
2. Check continuity between malfunctioning outside handle harness connector and BCM harness connector.

Outside handle			BCM		Continuity
Connector		Terminal	Connector	Terminal	
LH	D13	1	M122	101	Existed
RH	D43			100	

3. Check continuity between malfunctioning outside handle harness connector and ground.

Outside handle			Ground	Continuity
Connector		Terminal		
LH	D13	1		Not existed
RH	D43			

Is the inspection result normal?

YES >> Replace BCM. Refer to BCS-79, "Removal and Installation".
NO >> Repair or replace harness.

3. CHECK DOOR REQUEST SWITCH GROUND CIRCUIT

Check continuity between malfunctioning outside handle harness connector and ground.

Outside handle			Ground	Continuity
Connector		Terminal		
LH	D13	2		Existed
RH	D43			

Is the inspection result normal?

YES >> GO TO 4.
NO >> Repair or replace harness.

4. CHECK DOOR REQUEST SWITCH

Refer to DLK-85, "Component Inspection".

Is the inspection result normal?

YES >> GO TO 5.
NO >> Replace malfunctioning outside handle. Refer to DLK-212, "OUTSIDE HANDLE : Removal and Installation".

5. CHECK INTERMITTENT INCIDENT

Refer to GI-43, "Intermittent Incident".

>> INSPECTION END

Component Inspection

INFOID:0000000008160602

1. CHECK DOOR REQUEST SWITCH

1. Turn ignition switch OFF.
2. Disconnect malfunctioning outside handle connector.
3. Check continuity between malfunctioning outside handle terminals.

Terminal		Condition		Continuity
Outside handle				
1	2	Door request switch	Pressed	Existed
			Released	Not existed

Is the inspection result normal?

YES >> INSPECTION END
NO >> Replace malfunctioning outside handle. Refer to DLK-212, "OUTSIDE HANDLE : Removal and Installation".

UNLOCK SENSOR

Description

INFOID:0000000008160603

Detects door lock condition of driver side door.

Component Function Check

INFOID:0000000008160604

1.CHECK FUNCTION

Check (“UNLK SEN -DR”) in “Data Monitor” mode using CONSULT.

Monitor item	Condition		Status
UNLK SEN -DR	Driver side door	Lock	OFF
		Unlock	ON

Is the inspection result normal?

YES >> Unlock sensor is OK.
NO >> Refer to DLK-86, "Diagnosis Procedure".

Diagnosis Procedure

INFOID:0000000008160605

1.CHECK UNLOCK SENSOR INPUT SIGNAL

1. Turn ignition switch OFF.
2. Disconnect driver side door lock assembly connector.
3. Check signal between driver side door lock assembly harness connector and ground using oscilloscope.

(+)		(–)	Signal (Reference value)
Driver side door lock assembly			
Connector	Terminal		
D15	3	Ground	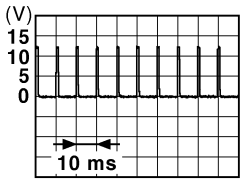 JPMIA0012GB

Is the inspection result normal?

YES >> GO TO 3.
NO >> GO TO 2.

2.CHECK UNLOCK SENSOR CIRCUIT

1. Disconnect BCM connector.
2. Check continuity between BCM harness connector and driver side door lock assembly harness connector.

BCM		Driver side door lock assembly		Continuity
Connector	Terminal	Connector	Terminal	
M123	119	D15	3	Existed

3. Check continuity between BCM harness connector and ground.

BCM		Ground	Continuity
Connector	Terminal		
M123	119		Not existed

Is the inspection result normal?

YES >> Replace BCM. Refer to BCS-79, "Removal and Installation".

NO >> Repair or replace harness.

3. CHECK UNLOCK SENSOR GROUND CIRCUIT

Check continuity between driver side assembly harness connector and ground.

Driver side door lock assembly		Ground	Continuity
Connector	Terminal		
D15	4		Existed

Is the inspection result normal?

YES >> GO TO 4.
NO >> Repair or replace harness.

4. CHECK UNLOCK SENSOR

Refer to DLK-87, "Component Inspection".

Is the inspection result normal?

YES >> GO TO 5.
NO >> Replace driver side door lock assembly. Refer to DLK-208, "DOOR LOCK : Removal and Installation".

5. CHECK INTERMITTENT INCIDENT

Refer to GI-43, "Intermittent Incident".

>> INSPECTION END

Component Inspection

INFOID:0000000008160606

1. CHECK UNLOCK SENSOR

1. Turn ignition switch OFF.
2. Disconnect driver side door lock assembly connector.
3. Check continuity between driver side door lock assembly terminals.

Driver side door lock assembly		Condition		Continuity
Terminal				
3	4	Driver side door	Unlock	Existed
			Lock	Not existed

Is the inspection result normal?

YES >> INSPECTION END
NO >> Replace driver side door lock assembly. Refer to DLK-208, "DOOR LOCK : Removal and Installation".

OUTSIDE KEY ANTENNA

Description

INFOID:0000000008160607

Detects whether Intelligent Key is outside the vehicle.
Integrated in outside handle (driver side, passenger side) and installed in rear bumper.

Component Function Check

INFOID:0000000008160608

1. CHECK OUT SIDE KEY ANTENNA FUNCTION

Check that intelligent key is in each outside key antenna detection range.

Does door lock/unlock when each request switch is pressed?

YES >> Outside key antenna is OK.
NO >> Refer to DLK-88, "Diagnosis Procedure".

Diagnosis Procedure

INFOID:0000000008160609

1. CHECK OUTSIDE KEY ANTENNA INPUT SIGNAL 1

1. Turn ignition switch OFF.
2. Check signal between BCM harness connector and ground using oscilloscope.

(+)			(–)	Condition		Signal (Reference value)
BCM						
Connector		Terminal				
LH	M122	76, 77	Ground	Door request switch is pressed	When Intelligent Key is in the antenna detection area.	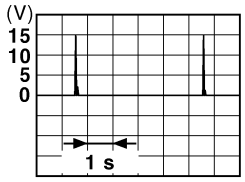 JMKIA0062GB
RH		74, 75				
Rear bumper	M121	38, 39			When Intelligent Key is not in the antenna detection area.	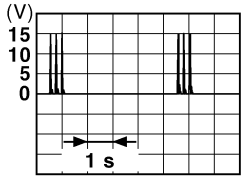 JMKIA0063GB

Is the inspection result normal?

YES >> Replace BCM. Refer to BCS-79, "Removal and Installation"
NO >> GO TO 2.

2. CHECK OUTSIDE KEY ANTENNA CIRCUIT

1. Disconnect BCM connector and malfunctioning outside key antenna connector.
2. Check continuity between malfunctioning outside handle or outside key antenna harness connector and BCM harness connector.

Outside handle/outside key antenna			BCM		Continuity
Connector		Terminal	Connector	Terminal	
LH	D14	1	M122	77	Existed
		2		76	
RH	D44	1		75	
		2		74	
Rear bumper	B63	1	M121	39	
		2		38	

3. Check continuity between malfunctioning outside handle or outside key antenna harness connector and ground.

Outside handle/outside key antenna				Continuity
Connector		Terminal		
LH	D14	1	Ground	Not existed
		2		
RH	D44	1		
		2		
Rear bumper	B63	1		
		2		

Is the inspection result normal?

YES >> GO TO 3.
NO >> Repair or replace harness.

3. CHECK OUTSIDE KEY ANTENNA INPUT SIGNAL 2

1. Replace malfunctioning outside key antenna. (New antenna or other antenna)
2. Connect BCM connector and malfunctioning outside key antenna (New antenna or other antenna) connector.
3. Check signal between BCM harness connector and ground using oscilloscope.

(+)			(–)	Condition		Signal (Reference value)
BCM						
Connector		Terminal				
LH	M122	76, 77	Ground	Door request switch is pressed	When Intelligent Key is in the antenna detection area.	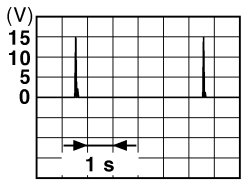 JMKIA0062GB
RH		74, 75				
Rear bumper	M121	38, 39			When Intelligent Key is not in the antenna detection area.	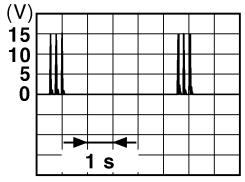 JMKIA0063GB

Is the inspection result normal?

YES-1 >> Replace outside key antenna LH (driver side). Refer to DLK-220, "DRIVER SIDE : Removal and Installation".

YES-2 >> Replace outside key antenna RH (passenger side). Refer to DLK-220, "PASSENGER SIDE : Removal and Installation".

YES-3 >> Replace outside key antenna (rear bumper). Refer to DLK-220, "REAR BUMPER : Removal and Installation".

NO >> Replace BCM. Refer to BCS-79, "Removal and Installation".

INTELLIGENT KEY WARNING BUZZER

Description

INFOID:0000000008160610

Answers back and warns for an inappropriate operation.

Component Function Check

INFOID:0000000008160611

1. CHECK FUNCTION

1. Use CONSULT to perform Active Test (“OUTSIDE BUZZER”).
2. Touch “ON” to check that it works normally.

Is the inspection result normal?

YES >> Intelligent Key warning buzzer is OK.
NO >> Refer to DLK-91, "Diagnosis Procedure".

Diagnosis Procedure

INFOID:0000000008160612

1. CHECK FUSE

1. Turn ignition switch OFF.
2. Check 10 A fuse, [No.6, located in fuse block (J/B)].

Is the inspection result normal?

YES >> GO TO 2.
NO >> Replace the blown fuse after repairing the affected circuit if a fuse is blown.

2. CHECK INTELLIGENT KEY WARNING BUZZER POWER SUPPLY CIRCUIT

1. Disconnect Intelligent Key warning buzzer connector.
2. Check voltage between Intelligent Key warning buzzer harness connector and ground.

(+)		(–)	Voltage (V) (Approx.)
Intelligent Key warning buzzer			
Connector	Terminal		
E57	1	Ground	Battery voltage

Is the inspection result normal?

YES >> GO TO 3.
NO >> Repair or replace harness.

3. CHECK INTELLIGENT KEY WARNING BUZZER CIRCUIT

1. Disconnect BCM connector.
2. Check continuity between BCM harness connector and Intelligent Key warning buzzer harness connector.

BCM		Intelligent Key warning buzzer		Continuity
Connector	Terminal	Connector	Terminal	
M121	64	E57	3	Existed

3. Check continuity between BCM harness connector and ground.

BCM		Ground	Continuity
Connector	Terminal		
M121	64		Not existed

Is the inspection result normal?

YES >> GO TO 4.
NO >> Repair or replace harness.

4. CHECK INTELLIGENT KEY WARNING BUZZER

Refer to DLK-92, "Component Inspection".

Is the inspection result normal?

YES >> Replace BCM. Refer to BCS-79, "Removal and Installation".
NO >> Replace Intelligent Key warning buzzer. Refer to DLK-221, "Removal and Installation".

Component Inspection

INFOID:0000000008160613

1. CHECK INTELLIGENT KEY WARNING BUZZER

1. Turn ignition switch OFF.
2. Disconnect Intelligent Key warning buzzer connector.
3. Connect battery power supply directly to Intelligent Key warning buzzer terminals and check the operation.

Terminal		Operation
Intelligent Key warning buzzer		
(+)	(–)	
1	3	Buzzer sounds

Is the inspection result normal?

YES >> INSPECTION END
NO >> Replace Intelligent Key warning buzzer. Refer to DLK-221, "Removal and Installation".

INTELLIGENT KEY

Description

INFOID:0000000008160614

The following functions are available when having and carrying electronic ID.
- Door lock/unlock
- Engine start

Remote control entry function and panic alarm function are available when operating on button.

Component Function Check

INFOID:0000000008160615

1.CHECK FUNCTION

Check (“RKE OPE COUN1”) in Data Monitor mode using CONSULT.

Monitor item	Condition
RKE OPE COUN1	Check that the numerical value is changing while operating on the Intelligent Key.

Is the inspection result normal?

YES >> Intelligent Key is OK.
NO >> Refer to DLK-93, "Diagnosis Procedure".

Diagnosis Procedure

INFOID:0000000008160616

1.CHECK INTELLIGENT KEY BATTERY

Check by connecting a resistance (approximately 300Ω) so that the current value becomes about 10 mA.

Standard : Approx. 2.5 - 3.0V

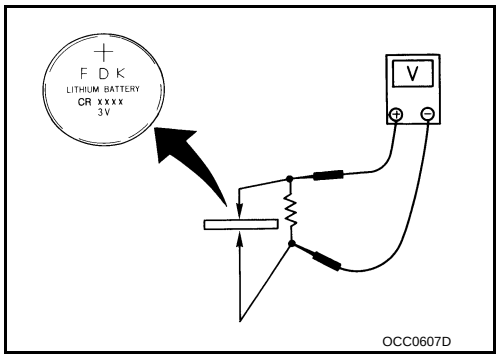

Is the measurement value within the specification?

YES >> Replace Intelligent Key.
NO >> Replace Intelligent Key battery. Refer to DLK-93, "Component Inspection".

Component Inspection

INFOID:0000000008160617

1. REPLACE INTELLIGENT KEY BATTERY

1. Release the lock knob at the back of the Intelligent Key and remove the mechanical key.
2. Insert remover tool (A) wrapped with a cloth into the slit of the corner and twist it to separate the upper part from the lower part.
   CAUTION:
   - **Do not touch the circuit board or battery terminal.**
   - **The key fob is water-resistant. However, if it does get wet, immediately wipe it dry.**

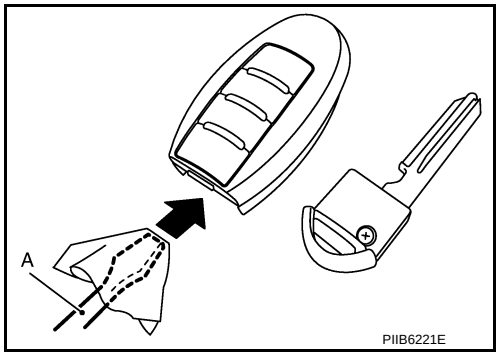

3. Replace the battery with new one.

4. Align the tips of the upper and lower parts, and then push them together until it is securely closed.
   CAUTION:
   - **When replacing battery, keep dirt, grease, and other foreign materials off the electrode contact area.**
   - **After replacing the battery, check that all Intelligent Key functions work normally.**

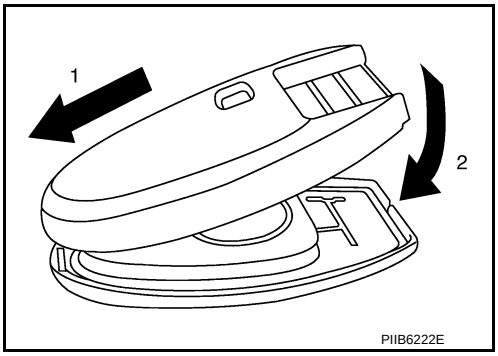

Is the inspection result normal?

YES >> Intelligent Key is OK.
NO >> Check remote keyless entry receiver. Refer to DLK-75, "Component Function Check".

Special Repair Requirement

INFOID:0000000008160618

Initialize the system using CONSULT.

KEY SLOT

Description

INFOID:0000000008160619

Detects whether Intelligent Key is inserted.
Immobilizer antenna amp checks Intelligent Key transponder.

Component Function Check

INFOID:0000000008160620

1.CHECK FUNCTION

Check (“KEY SW -SLOT”) in “Data Monitor” mode using CONSULT.

Monitor item	Condition		Status
KEY SW-SLOT	Intelligent Key	Inserted in key slot	ON
		Removed from key slot	OFF

Is the inspection result normal?

YES >> Key slot is OK.
NO >> Refer to DLK-95, "Diagnosis Procedure".

Diagnosis Procedure

INFOID:0000000008160621

1.CHECK FUSE

1. Turn ignition switch OFF.
2. Check 10 A fuse, [No.9, located in fuse block (J/B)].

Is the inspection result normal?

YES >> GO TO 2.
NO >> Replace the blown fuse after repairing the affected circuit if a fuse is blown.

2.CHECK KEY SLOT POWER SUPPLY CIRCUIT

1. Disconnect key slot connector.
2. Check voltage between key slot harness connector and ground.

(+)		(–)	Voltage (V) (Approx.)
Key slot			
Connector	Terminal		
M22	1	Ground	Battery voltage

Is the inspection result normal?

YES >> GO TO 3.
NO >> Repair or replace harness.

3.CHECK KEY SLOT CIRCUIT

1. Disconnect BCM connector.
2. Check continuity between BCM harness connector and key slot harness connector.

BCM		Key slot		Continuity
Connector	Terminal	Connector	Terminal	
M123	121	M22	11	Existed

3. Check continuity between BCM harness connector and ground.

BCM		Ground	Continuity
Connector	Terminal		
M123	121		Not existed

Is the inspection result normal?

YES >> GO TO 4.

NO >> Repair or replace harness.

4. CHECK KEY SLOT

Refer to DLK-96, "Component Inspection".

Is the inspection result normal?

YES >> Replace BCM. Refer to BCS-79, "Removal and Installation".
NO >> Replace key slot. Refer to DLK-222, "Removal and Installation".

Component Inspection

INFOID:0000000008160622

1. CHECK KEY SLOT

1. Turn ignition switch OFF.
2. Disconnect key slot connector.
3. Check continuity between key slot terminals.

Key slot		Condition		Continuity
Terminal				
1	11	Intelligent Key	Inserted in key slot	Existed
			Removed in key slot	Not existed

Is the inspection result normal?

YES >> INSPECTION END
NO >> Replace key slot. Refer to DLK-222, "Removal and Installation".

KEY SLOT INDICATOR

Description

INFOID:0000000008160623

Blinks when Intelligent Key insertion is required.

Component Function Check

INFOID:0000000008160624

1.CHECK FUNCTION

1. Use CONSULT to perform Active Test (“KEY SLOT ILLUMI”).
2. Touch “ON” to check that it works normally.

Is the inspection result normal?

YES >> Key slot is OK.
NO >> Refer to DLK-97, "Diagnosis Procedure".

Diagnosis Procedure

INFOID:0000000008160625

1.CHECK FUSE

1. Turn ignition switch OFF.
2. Check 10 A fuse, [No. 6, located in fuse block (J/B)].

Is the inspection result normal?

YES >> GO TO 2.
NO >> Replace the blown fuse after repairing the affected circuit if a fuse is blown.

2.CHECK KEY SLOT POWER SUPPLY CIRCUIT

1. Disconnect key slot connector.
2. Check voltage between key slot harness connector and ground.

(+)		(–)	Voltage (V) (Approx.)
Key slot			
Connector	Terminal		
M22	5	Ground	Battery voltage

Is the inspection result normal?

YES >> GO TO 3.
NO >> Repair or replace harness.

3.CHECK KEY SLOT CIRCUIT

1. Disconnect BCM connector.
2. Check continuity between BCM harness connector and key slot harness connector.

BCM		Key slot		Continuity
Connector	Terminal	Connector	Terminal	
M122	92	M22	6	Existed

3. Check continuity between BCM harness connector and ground.

BCM		Ground	Continuity
Connector	Terminal		
M122	92		Not existed

Is the inspection result normal?

YES >> GO TO 4.
NO >> Repair or replace harness.

4.CHECK KEY SLOT

Refer to DLK-98, "Component Inspection".

Is the inspection result normal?

YES >> Replace BCM. Refer to BCS-79, "Removal and Installation".
NO >> Replace key slot. Refer to DLK-222, "Removal and Installation".

Component Inspection

INFOID:0000000008160626

1. CHECK KEY SLOT INDICATOR

1. Turn ignition switch OFF.
2. Disconnect key slot connector.
3. Connect battery power supply directly to key slot terminals and check the operation.

Terminal		Operation
Key slot		
(+)	(–)	
5	6	Key slot illuminates

Is the inspection result normal?

YES >> INSPECTION END
NO >> Replace key slot. Refer to DLK-222, "Removal and Installation".

HORN FUNCTION

Description

INFOID:0000000008160627

Performs answer-back for each operation with horn.

Component Function Check

INFOID:0000000008160628

1.CHECK FUNCTION

1. Use CONSULT to perform Active Test (“HORN”).
2. Touch “ON” to check that it works normally.

Is the operation normal?

YES >> Horn function is OK.
NO >> Refer to DLK-99, "Diagnosis Procedure".

Diagnosis Procedure

INFOID:0000000008160629

1.CHECK HORN SWITCH

Check horn function with horn switch

Do the horns sound?

YES >> GO TO 2.
NO >> Refer to HRN-2, "Wiring Diagram - HORN -".

2.CHECK HORN RELAY POWER SUPPLY

1. Turn ignition switch ON.
2. Perform “ACTIVE TEST” (“HORN”) using CONSULT.
3. Check voltage between malfunctioning horn relay harness connector and ground.

(+)			(–)	Test item		Voltage (V) (Approx.)
Horn relay						
Connector		Terminal				
Low	E11	1	Ground	HORN	ON	Battery voltage → 0 → Battery voltage
High	E18	3			Other than above	Battery voltage

Is the inspection result normal?

YES >> GO TO 4.
NO >> GO TO 3.

3.CHECK HORN RELAY CIRCUIT

1. Turn ignition switch OFF.
2. Disconnect IPDM E/R connector and horn relay.
3. Check continuity between IPDM E/R harness connector and malfunctioning horn relay terminal connector.

IPDM E/R		Horn relay		Continuity
Connector	Terminal	Connector	Terminal	
E6	44	E11	1	Existed
	45	E18	3	

4. Check continuity between IPDM E/R harness connector and ground.

IPDM E/R		Ground	Continuity
Connector	Terminal		
E6	44		Not existed
	45		

Is the inspection result normal?

YES >> Replace IPDM E/R. Refer to PCS-31, "Removal and Installation".

NO >> Repair or replace harness.

4. CHECK INTERMITTENT INCIDENT

Refer to GI-43, "Intermittent Incident".

Is the inspection result normal?

>> INSPECTION END

COMBINATION METER DISPLAY FUNCTION

Description

INFOID:0000000008160630

Displays each operation method guide and warning for system malfunction.

Component Function Check

INFOID:0000000008160631

1.CHECK FUNCTION

Use CONSULT to perform Active Test (“LCD”).

Is each warning displayed on meter display?

Is the inspection result normal?

YES >> Combination meter display function is OK.
NO >> Refer to DLK-101, "Diagnosis Procedure".

Diagnosis Procedure

INFOID:0000000008160632

1.CHECK COMBINATION METER

Refer to MWI-73, "DTC Index".

Is the inspection result normal?

YES >> GO TO 2.
NO >> Check combination meter. Refer to MWI-4, "Work flow".

2.CHECK INTERMITTENT INCIDENT

Refer to GI-43, "Intermittent Incident".

>> INSPECTION END

BUZZER (COMBINATION METER)

Description

INFOID:0000000008160633

Performs operation method guide and warning with buzzer.

Component Function Check

INFOID:0000000008160634

1.CHECK FUNCTION

1. Use CONSULT to perform Active Test (“INSIDE BUZZER”).
2. Touch “TAKE OUT”, “KNOB”or “KEY” to check that it works normally.

Is the inspection result normal?

Yes >> Warning buzzer into combination meter is OK.
No >> Refer to DLK-102, "Diagnosis Procedure".

Diagnosis Procedure

INFOID:0000000008160635

1.CHECK METER BUZZER CIRCUIT

Refer to WCS-23, "Component Function Check".

Is the inspection result normal?

Yes >> GO TO 2.
No >> Repair or replace harness.

2.CHECK INTERMITTENT INCIDENT

Refer to GI-43, "Intermittent Incident".

>> INSPECTION END

KEY WARNING LAMP

Description

INFOID:0000000008160636

Performs operation method guide and warning together with buzzer.

Component Function Check

INFOID:0000000008160637

1.CHECK FUNCTION

1. Use CONSULT to perform Active Test (“INDICATOR”).
2. Touch “KEY IND” or “KEY ON” to check that it works normally.

Is the inspection result normal?

YES >> Key warning lamp is OK.
NO >> Refer to DLK-103, "Diagnosis Procedure".

Diagnosis Procedure

INFOID:0000000008160638

1.CHECK KEY WARNING LAMP

Refer to WCS-3, "Work Flow".

Is the inspection result normal?

YES >> GO TO 2.
NO >> Repair or replace harness.

2.CHECK INTERMITTENT INCIDENT

Refer to GI-43, "Intermittent Incident".

>> INSPECTION END

HAZARD FUNCTION

Description

INFOID:0000000008160639

Performs answer-back for each operation with number of blinks.

Component Function Check

INFOID:0000000008160640

1.CHECK FUNCTION

1. Use CONSULT to perform Active Test (“FLASHER”).
2. Touch “LH” or “RH” to check that it works normally.

Is the inspection result normal?

YES >> Hazard warning lamp circuit is OK.
NO >> Refer to DLK-104, "Diagnosis Procedure".

Diagnosis Procedure

INFOID:0000000008160641

1.CHECK HAZARD SWITCH CIRCUIT

Refer to EXL-67, "Wiring Diagram - TURN AND HAZARD WARNING LAMPS -".

Is the inspection result normal?

YES >> GO TO 2.
NO >> Repair or replace harness.

2.CHECK INTERMITTENT INCIDENT

Refer to GI-43, "Intermittent Incident".

>> INSPECTION END

INTEGRATED HOMELINK TRANSMITTER

Description

INFOID:0000000008160642

Integrated home link transmitter can store and transmit a maximum of 3 radio signals.
Allows operation of garage doors, gates, home and office lighting, entry door locks and security system, etc.
Integrated home link transmitter power supply uses vehicle battery, which enables it to maintain every program in case battery is discharged or removed.

Component Function Check

INFOID:0000000008160643

1. CHECK FUNCTION

Check that system receiver (garage door opener, etc.) operates with original hand-held transmitter.

Is the inspection result normal?

YES >> GO TO 2.
NO >> Receiver or hand-held transmitter is malfunctioning.

2. CHECK ILLUMINATE

1. Turn ignition switch OFF.
2. Does red light of transmitter illuminate when any transmitter button is pressed?

Is the inspection result normal?

YES >> GO TO 3.
NO >> Refer to DLK-105, "Diagnosis Procedure".

3. CHECK TRANSMITTER

Check transmitter using Tool*.
*:For details, refer to Technical Service Bulletin.

Is the inspection result normal?

YES >> Receiver or hand-held transmitter malfunction, not vehicle related.
NO >> Replace auto anti-dazzling inside mirror (integrated home link transmitter). Refer to MIR-34, "Removal and Installation".

Diagnosis Procedure

INFOID:0000000008160644

1. CHECK POWER SUPPLY

1. Turn ignition switch OFF.
2. Disconnect auto anti-dazzling inside mirror (integrated home link transmitter) connector.
3. Check voltage between auto anti-dazzling inside mirror (integrated home link transmitter) harness connector and ground.

(+)		(–)	Condition		Voltage (V) (Approx.)
Auto anti-dazzling inside mirror (Integrated home link transmitter)					
Connector	Terminal				
R6	10	Ground	Ignition switch position	OFF	Battery voltage
				ON	

Is the inspection result normal?

YES >> GO TO 2.
NO-1 >> Check 10A fuse [No. 6 located in the fuse block (J/B)].
NO-2 >> Harness for open or short between fuse and auto anti-dazzling inside mirror (integrated home link transmitter).

2. CHECK GROUND CIRCUIT

Check continuity between auto anti-dazzling inside mirror (integrated home link transmitter) harness connector and ground.

Auto anti-dazzling inside mirror (Integrated home link transmitter)		Ground	Continuity
Connector	Terminal		
R6	8		Existed

Is the inspection result normal?

YES >> GO TO 3.
NO >> Repair or replace harness.

3. CHECK INTERMITTENT INCIDENT

Refer to GI-43, "Intermittent Incident".

>> INSPECTION END

POWER DOOR LOCK SYSTEM

Wiring Diagram - POWER DOOR LOCK SYSTEM -

INFOID:0000000008160645

For connector terminal arrangements, harness layouts, and alphabets in a ⬡ (option abbreviation; if not described in wiring diagram), refer to GI-12, "Connector Information".

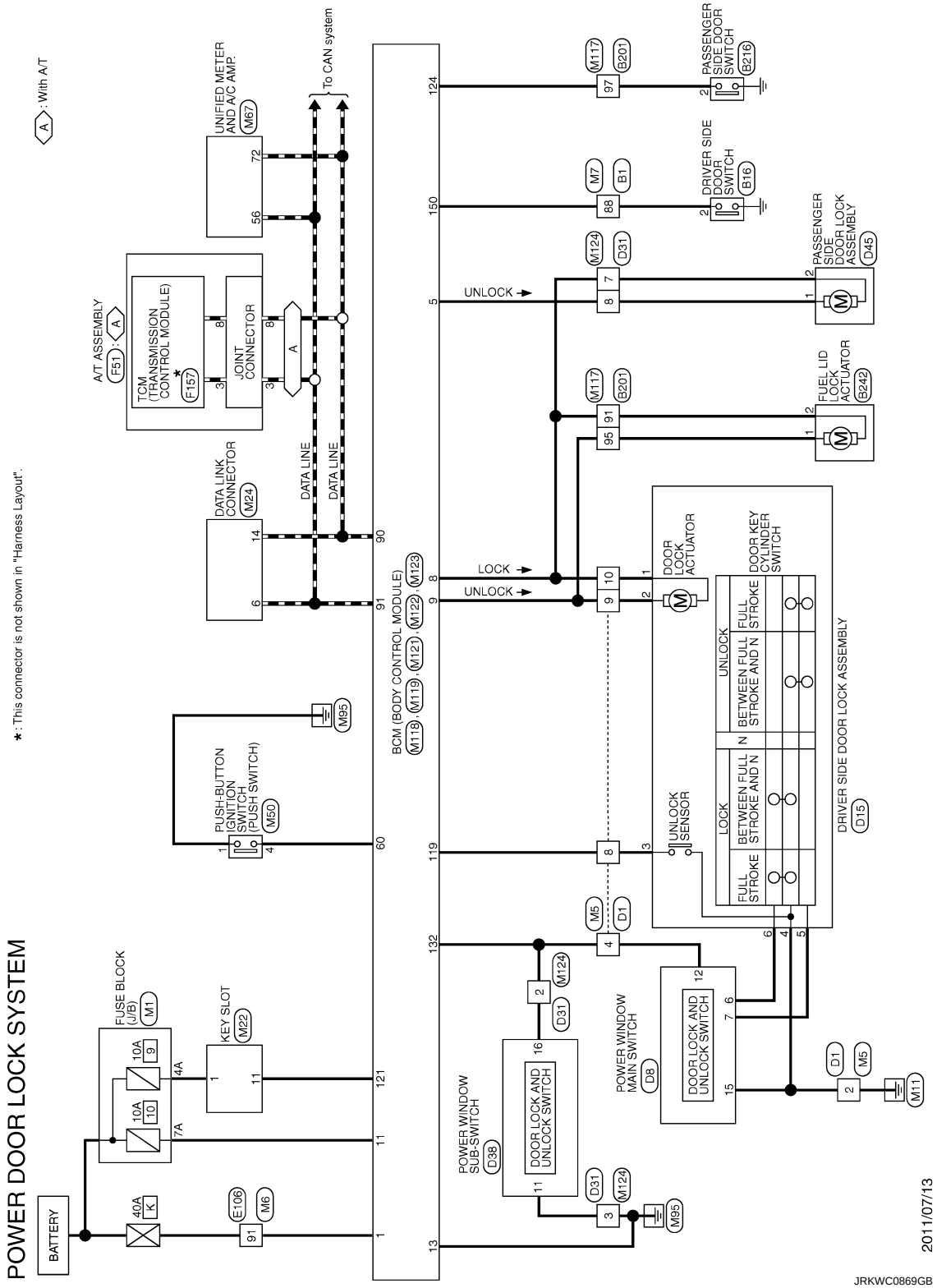

INTELLIGENT KEY SYSTEM

Wiring Diagram - INTELLIGENT KEY SYSTEM -

INFOID:0000000008160646

For connector terminal arrangements, harness layouts, and alphabets in a ⬡ (option abbreviation; if not described in wiring diagram), refer to GI-12, "Connector Information".

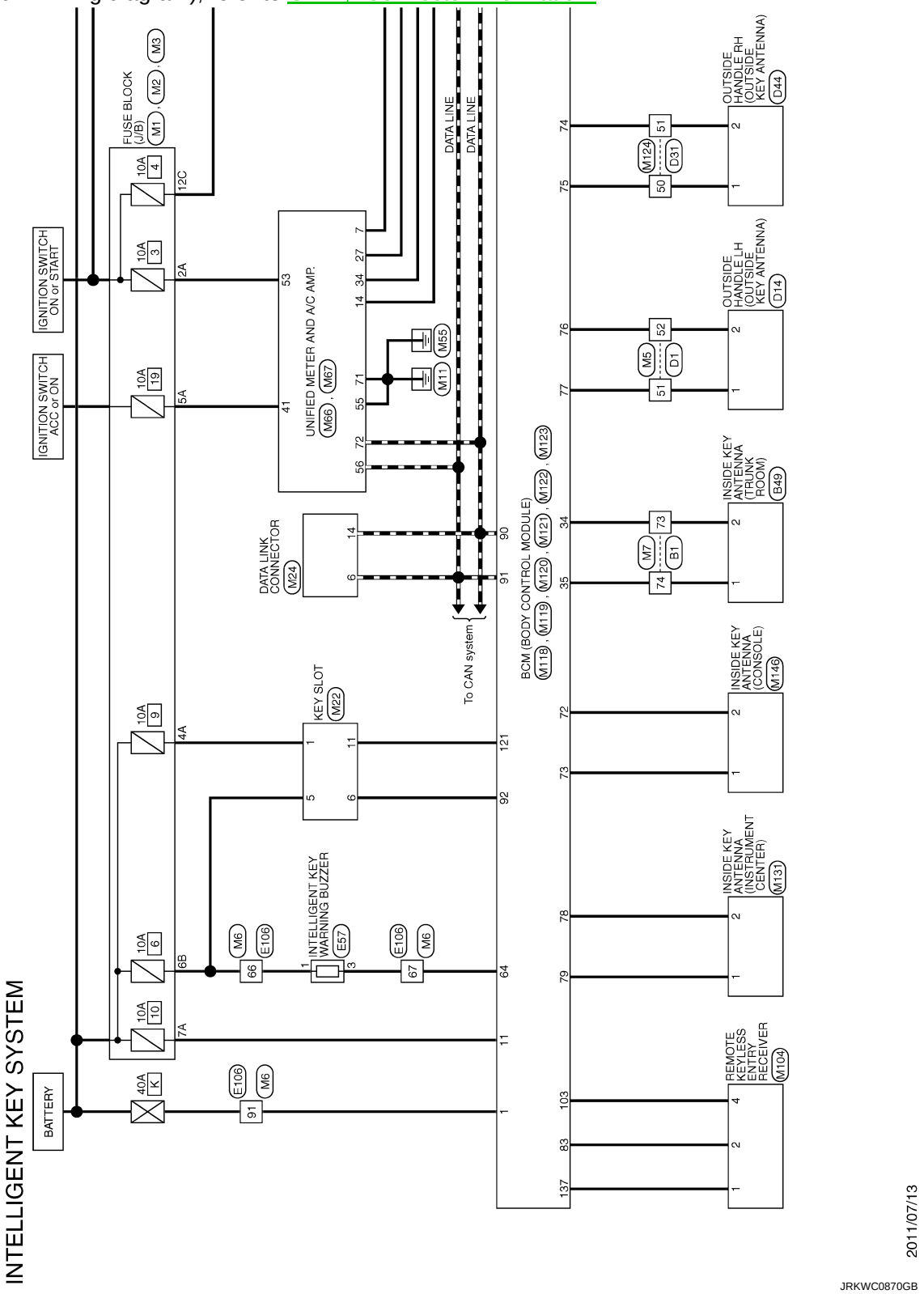

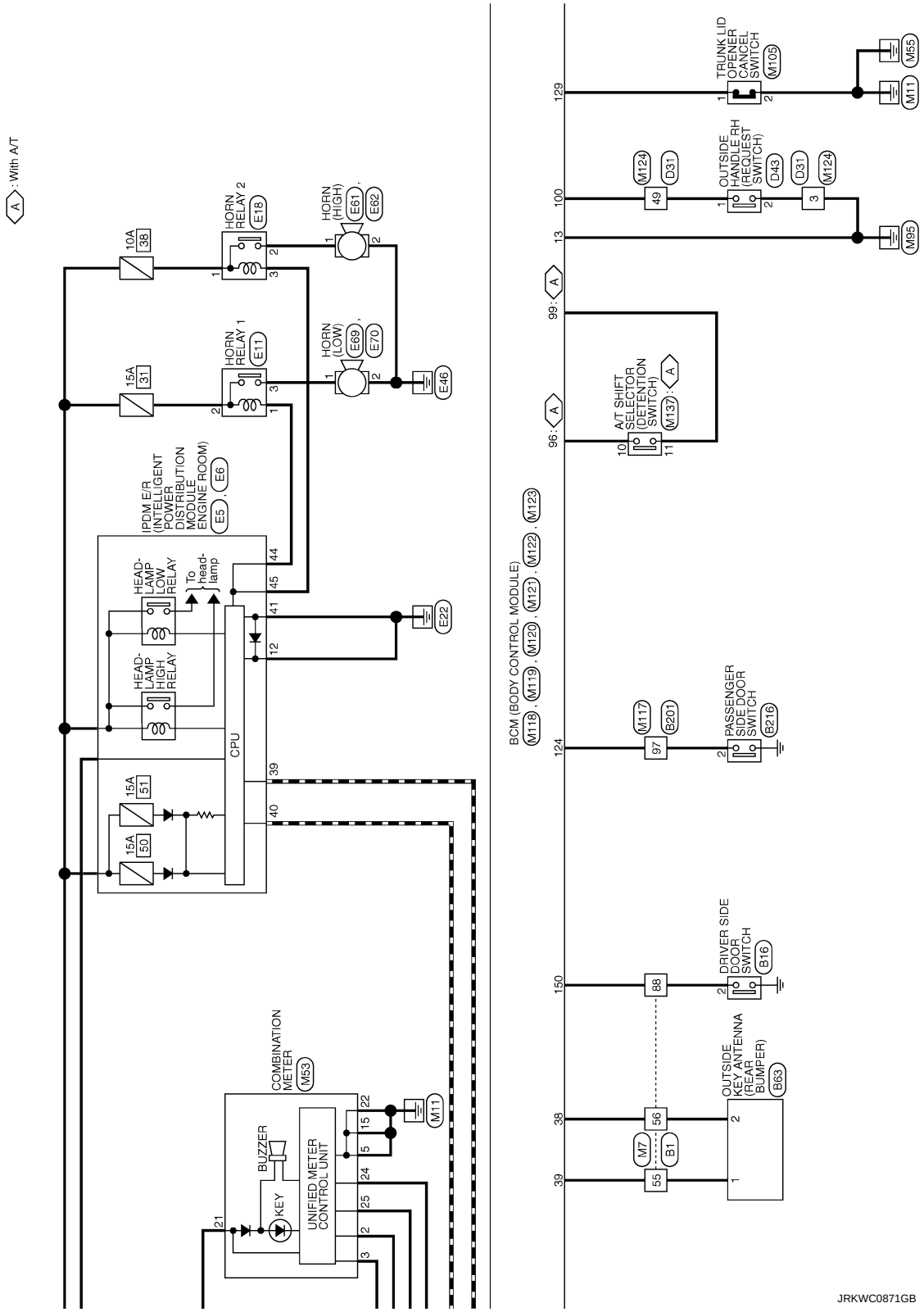
A : With A/T
10A 38
15A 31
HORN RELAY 2 E18
HORN RELAY 1 E11
HORN (HIGH) E61, E62
HORN (LOW) E69, E70
E46
IPDM E/R (INTELLIGENT POWER DISTRIBUTION MODULE ENGINE ROOM) E5, E6
HEAD-LAMP LOW RELAY
HEAD-LAMP HIGH RELAY
To head-lamp
CPU
E22
15A 51
15A 50
COMBINATION METER M53
BUZZER
KEY
UNIFIED METER CONTROL UNIT
M11
BCM (BODY CONTROL MODULE) M118, M119, M120, M121, M122, M123
A/T SHIFT SELECTOR (DETENTION SWITCH) M137
OUTSIDE HANDLE RH (REQUEST SWITCH) D43
TRUNK LID OPENER CANCEL SWITCH M105
M55
M95
PASSENGER SIDE DOOR SWITCH B216
DRIVER SIDE DOOR SWITCH B16
OUTSIDE KEY ANTENNA (REAR BUMPER) B63
JRKWC0871GB

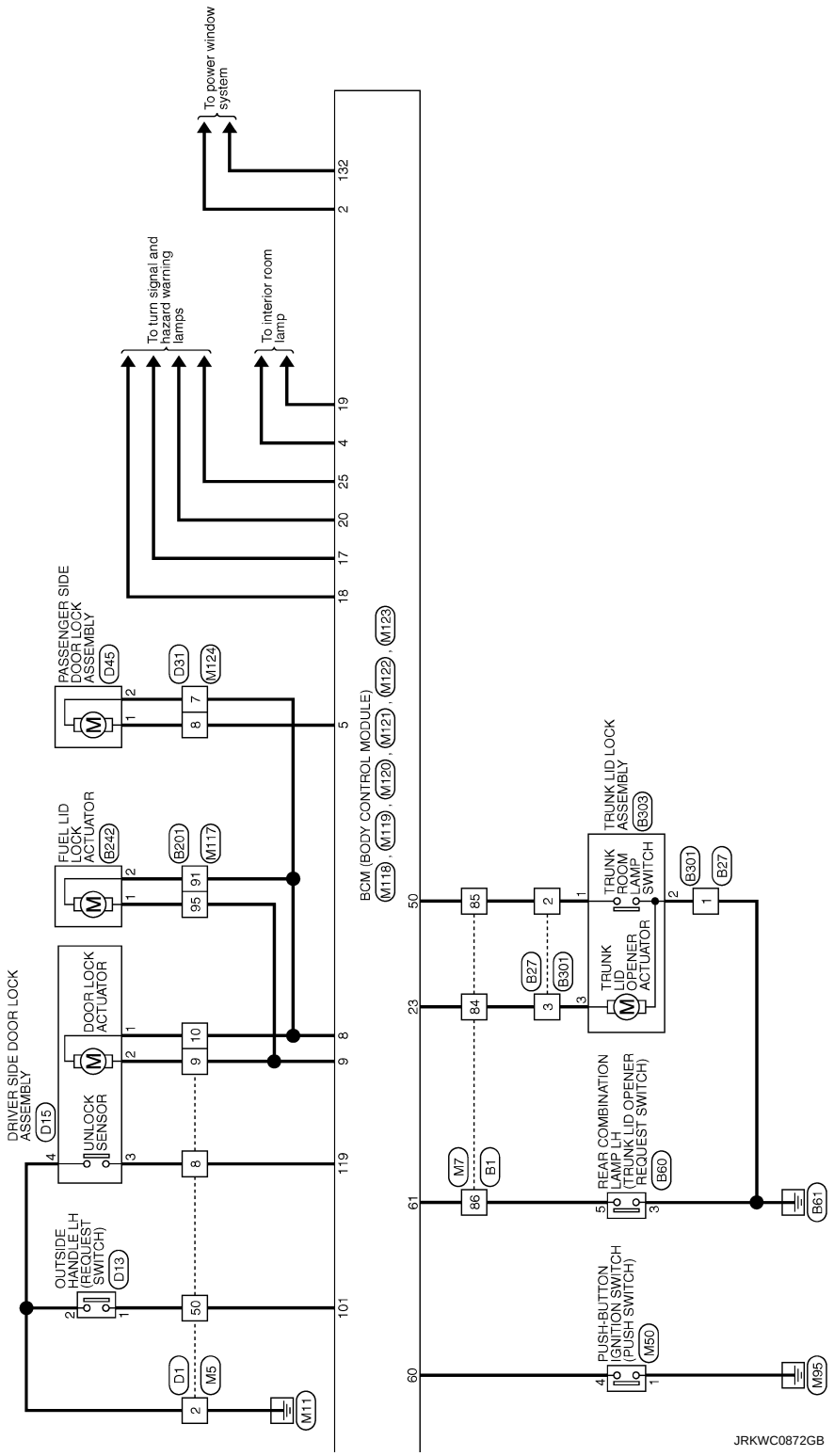
To power window system
To turn signal and hazard warning lamps
To interior room lamp
PASSENGER SIDE DOOR LOCK ASSEMBLY
D45
D31
M124
FUEL LID LOCK ACTUATOR
B242
B201
M117
DRIVER SIDE DOOR LOCK ASSEMBLY
D15
UNLOCK SENSOR
DOOR LOCK ACTUATOR
OUTSIDE HANDLE LH (REQUEST SWITCH)
D13
D1
M5
M11
BCM (BODY CONTROL MODULE)
M118, M119, M120, M121, M122, M123
TRUNK LID LOCK ASSEMBLY
B303
TRUNK ROOM LAMP SWITCH
TRUNK LID OPENER ACTUATOR
B301
B27
M7
B1
REAR COMBINATION LAMP LH (TRUNK LID OPENER REQUEST SWITCH)
B60
B61
PUSH-BUTTON IGNITION SWITCH (PUSH SWITCH)
M50
M95
JRKWC0872GB

TRUNK LID OPENER

Wiring Diagram - TRUNK LID OPENER -

INFOID:0000000008160647

For connector terminal arrangements, harness layouts, and alphabets in a ⬡ (option abbreviation; if not described in wiring diagram), refer to GI-12, "Connector Information".

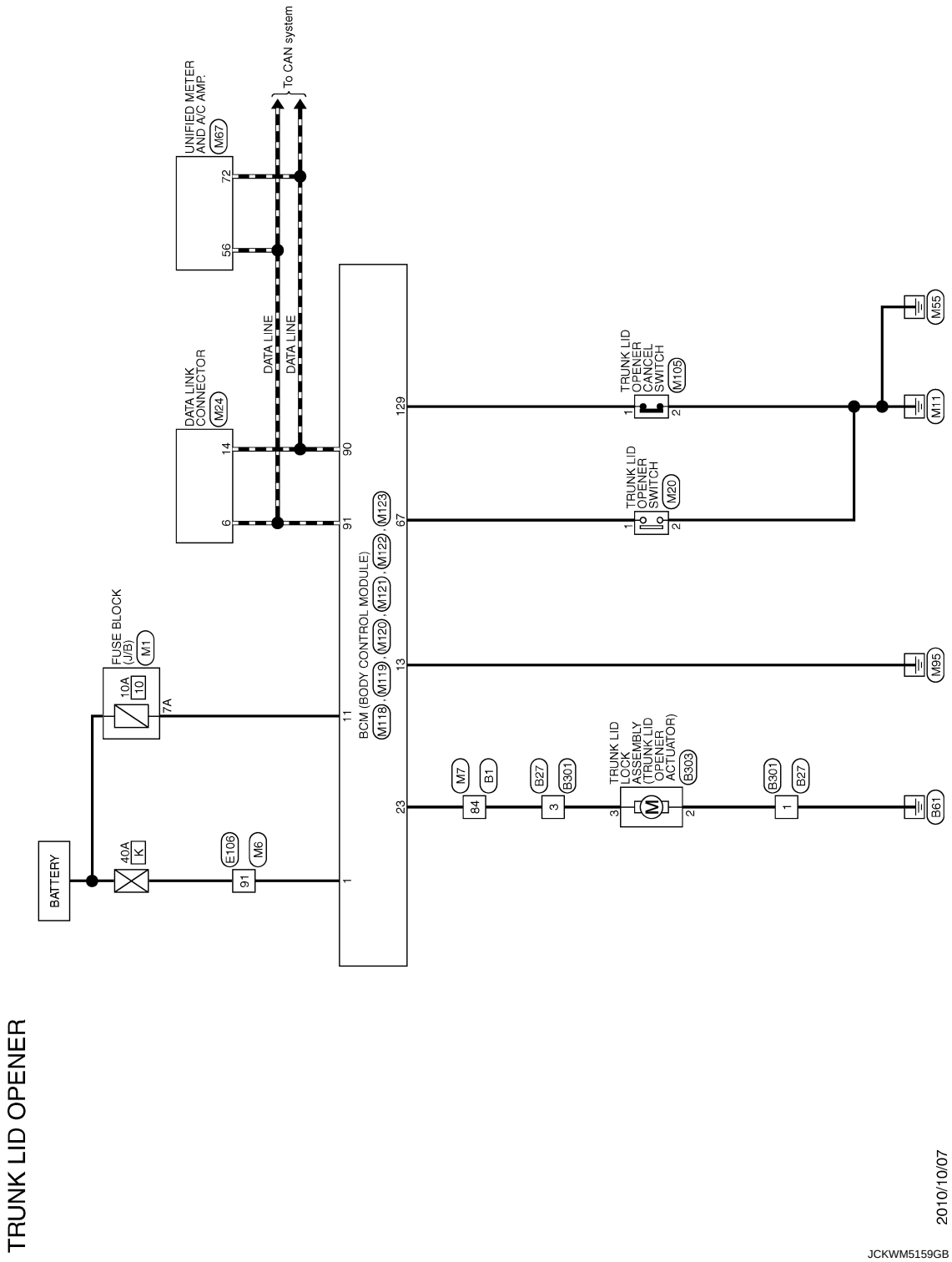

INTEGRATED HOMELINK TRANSMITTER SYSTEM

Wiring Diagram - INTEGRATED HOMELINK TRANSMITTER SYSTEM -

INFOID:0000000008160648

For connector terminal arrangements, harness layouts, and alphabets in a ⬡ (option abbreviation; if not described in wiring diagram), refer to GI-12, "Connector Information".

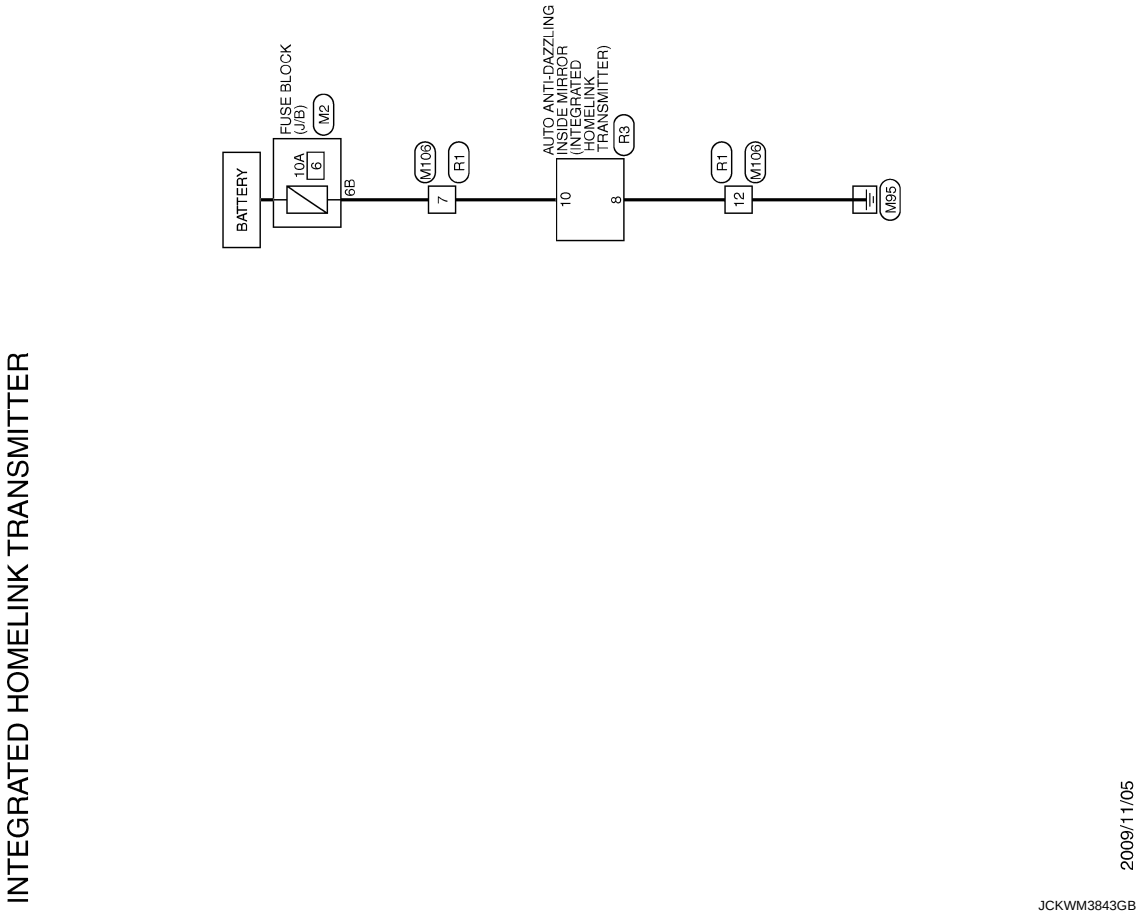

ECU DIAGNOSIS INFORMATION

BCM (BODY CONTROL MODULE)

Reference Value

INFOID:0000000008793430

VALUES ON THE DIAGNOSIS TOOL

NOTE:
The following table includes information (items) inapplicable to this vehicle. For information (items) applicable to this vehicle, refer to CONSULT display items.

CONSULT MONITOR ITEM

Monitor Item	Condition	Value/Status
FR WIPER HI	Other than front wiper switch HI	Off
	Front wiper switch HI	On
FR WIPER LOW	Other than front wiper switch LO	Off
	Front wiper switch LO	On
FR WASHER SW	Front washer switch OFF	Off
	Front washer switch ON	On
FR WIPER INT	Other than front wiper switch INT/AUTO	Off
	Front wiper switch INT/AUTO	On
FR WIPER STOP	Front wiper is not in STOP position	Off
	Front wiper is in STOP position	On
INT VOLUME	Wiper volume dial is in a dial position 1 - 7	Wiper volume dial position
TURN SIGNAL R	Other than turn signal switch RH	Off
	Turn signal switch RH	On
TURN SIGNAL L	Other than turn signal switch LH	Off
	Turn signal switch LH	On
TAIL LAMP SW	Other than lighting switch 1ST and 2ND	Off
	Lighting switch 1ST or 2ND	On
HI BEAM SW	Other than lighting switch HI	Off
	Lighting switch HI	On
HEAD LAMP SW 1	Other than lighting switch 2ND	Off
	Lighting switch 2ND	On
HEAD LAMP SW 2	Other than lighting switch 2ND	Off
	Lighting switch 2ND	On
PASSING SW	Other than lighting switch PASS	Off
	Lighting switch PASS	On
AUTO LIGHT SW	Other than lighting switch AUTO	Off
	Lighting switch AUTO	On
FR FOG SW	Front fog lamp switch OFF	Off
	Front fog lamp switch ON	On
RR FOG SW	**NOTE:** The item is indicated, but not monitored.	Off
DOOR SW-DR	Driver door closed	Off
	Driver door opened	On
DOOR SW-AS	Passenger door closed	Off
	Passenger door opened	On

Monitor Item	Condition	Value/Status
DOOR SW-RR	**NOTE:** The item is indicated, but not monitored.	Off
DOOR SW-RL	**NOTE:** The item is indicated, but not monitored.	Off
DOOR SW-BK	**NOTE:** The item is indicated, but not monitored.	Off
CDL LOCK SW	Other than power door lock switch LOCK	Off
	Power door lock switch LOCK	On
CDL UNLOCK SW	Other than power door lock switch UNLOCK	Off
	Power door lock switch UNLOCK	On
KEY CYL LK-SW	Other than driver door key cylinder LOCK position	Off
	Driver door key cylinder LOCK position	On
KEY CYL UN-SW	Other than driver door key cylinder UNLOCK position	Off
	Driver door key cylinder UNLOCK position	On
KEY CYL SW-TR	**NOTE:** The item is indicated, but not monitored.	Off
HAZARD SW	Hazard switch is OFF	Off
	Hazard switch is ON	On
REAR DEF SW	**NOTE:** The item is indicated, but not monitored.	Off
TR CANCEL SW	Trunk lid opener cancel switch OFF	Off
	Trunk lid opener cancel switch ON	On
TR/BD OPEN SW	Trunk lid opener switch OFF	Off
	While the trunk lid opener switch is turned ON	On
TRNK/HAT MNTR	Trunk lid closed	Off
	Trunk lid opened	On
REVERSE SW	**NOTE:** The item is indicated, but not monitored.	Off
RKE-LOCK	LOCK button of the Intelligent Key is not pressed	Off
	LOCK button of the Intelligent Key is pressed	On
RKE-UNLOCK	UNLOCK button of the Intelligent Key is not pressed	Off
	UNLOCK button of the Intelligent Key is pressed	On
RKE-TR/BD	TRUNK OPEN button of the Intelligent Key is not pressed	Off
	TRUNK OPEN button of the Intelligent Key is pressed	On
RKE-PANIC	PANIC button of the Intelligent Key is not pressed	Off
	PANIC button of the Intelligent Key is pressed	On
RKE-P/W OPEN	UNLOCK button of the Intelligent Key is not pressed	Off
	UNLOCK button of the Intelligent Key is pressed and held	On
RKE-MODE CHG	LOCK/UNLOCK button of the Intelligent Key is not pressed and held simultaneously	Off
	LOCK/UNLOCK button of the Intelligent Key is pressed and held simultaneously	On
OPTICAL SENSOR	Bright outside of the vehicle	Close to 5 V
	Dark outside of the vehicle	Close to 0 V
REQ SW -DR	Driver door request switch is not pressed	Off
	Driver door request switch is pressed	On
REQ SW -AS	Passenger door request switch is not pressed	Off
	Passenger door request switch is pressed	On

Monitor Item	Condition	Value/Status
REQ SW -RR	**NOTE:** The item is indicated, but not monitored.	Off
REQ SW -RL	**NOTE:** The item is indicated, but not monitored.	Off
REQ SW -BD/TR	Trunk lid opener request switch is not pressed	Off
	Trunk lid opener request switch is pressed	On
PUSH SW	Push-button ignition switch (push switch) is not pressed	Off
	Push-button ignition switch (push switch) is pressed	On
IGN RLY2 -F/B	**NOTE:** The item is indicated, but not monitored.	Off
ACC RLY -F/B	**NOTE:** The item is indicated, but not monitored.	Off
CLUCH SW	The clutch pedal is not depressed	Off
	The clutch pedal is depressed	On
BRAKE SW 1	The brake pedal is depressed when No. 7 fuse is blown	Off
	The brake pedal is not depressed when No. 7 fuse is blown, or No. 7 fuse is normal	On
BRAKE SW 2	The brake pedal is not depressed	Off
	The brake pedal is depressed	On
DETE/CANCL SW	• Selector lever in P position (Except M/T models) • The clutch pedal is depressed (M/T models)	Off
	• Selector lever in any position other than P (Except M/T models) • The clutch pedal is not depressed (M/T models)	On
SFT PN/N SW	Selector lever in any position other than P and N	Off
	Selector lever in P or N position	On
S/L -LOCK	**NOTE:** The item is indicated, but not monitored.	Off
S/L -UNLOCK	**NOTE:** The item is indicated, but not monitored.	Off
S/L RELAY-F/B	**NOTE:** The item is indicated, but not monitored.	Off
UNLK SEN -DR	Driver door is unlocked	Off
	Driver door is locked	On
PUSH SW -IPDM	Push-button ignition switch (push-switch) is not pressed	Off
	Push-button ignition switch (push-switch) is pressed	On
IGN RLY1 -F/B	Ignition switch in OFF or ACC position	Off
	Ignition switch in ON position	On
DETE SW -IPDM	Selector lever in any position other than P	Off
	Selector lever in P position	On
SFT PN -IPDM	• Selector lever in any position other than P and N (Except M/T models) • The clutch pedal is not depressed (M/T models)	Off
	• Selector lever in P or N position • The clutch pedal is depressed	On
SFT P -MET	Selector lever in any position other than P	Off
	Selector lever in P position	On
SFT N -MET	Selector lever in any position other than N	Off
	Selector lever in N position	On

Monitor Item	Condition	Value/Status
ENGINE STATE	Engine stopped	Stop
	While the engine stalls	Stall
	At engine cranking	Crank
	Engine running	Run
S/L LOCK-IPDM	**NOTE:** The item is indicated, but not monitored.	Off
S/L UNLK-IPDM	**NOTE:** The item is indicated, but not monitored.	Off
S/L RELAY-REQ	**NOTE:** The item is indicated, but not monitored.	Off
VEH SPEED 1	While driving	Equivalent to speed-ometer reading
VEH SPEED 2	While driving	Equivalent to speed-ometer reading
DOOR STAT-DR	Driver door is locked	LOCK
	Wait with selective UNLOCK operation (60 seconds)	READY
	Driver door is unlocked	UNLOCK
DOOR STAT-AS	Passenger door is locked	LOCK
	Wait with selective UNLOCK operation (60 seconds)	READY
	Passenger door is unlocked	UNLOCK
ID OK FLAG	Driver side door is open after ignition switch is turned OFF (Selector lever is in the P position except for M/T models)	Reset
	Ignition switch is ON	Set
PRMT ENG STRT	The engine start is prohibited	Reset
	The engine start is permitted	Set
PRMT RKE STRT	**NOTE:** The item is indicated, but not monitored.	Reset
KEY SW -SLOT	The Intelligent Key is not inserted into key slot	Off
	The Intelligent Key is inserted into key slot	On
RKE OPE COUN1	During the operation of the Intelligent Key	Operation frequency of the Intelligent Key
RKE OPE COUN2	**NOTE:** The item is indicated, but not monitored.	—
CONFRM ID ALL	The key ID that the key slot receives is not recognized by any key ID registered to BCM.	Yet
	The key ID that the key slot receives is recognized by any key ID registered to BCM.	Done
CONFIRM ID4	The key ID that the key slot receives is not recognized by the fourth key ID regis-tered to BCM.	Yet
	The key ID that the key slot receives is recognized by the fourth key ID registered to BCM.	Done
CONFIRM ID3	The key ID that the key slot receives is not recognized by the third key ID regis-tered to BCM.	Yet
	The key ID that the key slot receives is recognized by the third key ID registered to BCM.	Done
CONFIRM ID2	The key ID that the key slot receives is not recognized by the second key ID reg-istered to BCM.	Yet
	The key ID that the key slot receives is recognized by the second key ID regis-tered to BCM.	Done

Monitor Item	Condition	Value/Status
CONFIRM ID1	The key ID that the key slot receives is not recognized by the first key ID registered to BCM.	Yet
	The key ID that the key slot receives is recognized by the first key ID registered to BCM.	Done
TP 4	The ID of fourth Intelligent Key is not registered to BCM	Yet
	The ID of fourth Intelligent Key is registered to BCM	Done
TP 3	The ID of third Intelligent Key is not registered to BCM	Yet
	The ID of third Intelligent Key is registered to BCM	Done
TP 2	The ID of second Intelligent Key is not registered to BCM	Yet
	The ID of second Intelligent Key is registered to BCM	Done
TP 1	The ID of first Intelligent Key is not registered to BCM	Yet
	The ID of first Intelligent Key is registered to BCM	Done
AIR PRESS FL	Ignition switch ON (Only when the signal from the transmitter is received)	Air pressure of front LH tire
AIR PRESS FR	Ignition switch ON (Only when the signal from the transmitter is received)	Air pressure of front RH tire
AIR PRESS RR	Ignition switch ON (Only when the signal from the transmitter is received)	Air pressure of rear RH tire
AIR PRESS RL	Ignition switch ON (Only when the signal from the transmitter is received)	Air pressure of rear LH tire
ID REGST FL1	ID of front LH tire transmitter is registered	Done
	ID of front LH tire transmitter is not registered	Yet
ID REGST FR1	ID of front RH tire transmitter is registered	Done
	ID of front RH tire transmitter is not registered	Yet
ID REGST RR1	ID of rear RH tire transmitter is registered	Done
	ID of rear RH tire transmitter is not registered	Yet
ID REGST RL1	ID of rear LH tire transmitter is registered	Done
	ID of rear LH tire transmitter is not registered	Yet
WARNING LAMP	Tire pressure indicator OFF	Off
	Tire pressure indicator ON	On
BUZZER	Tire pressure warning alarm is not sounding	Off
	Tire pressure warning alarm is sounding	On

TERMINAL LAYOUT

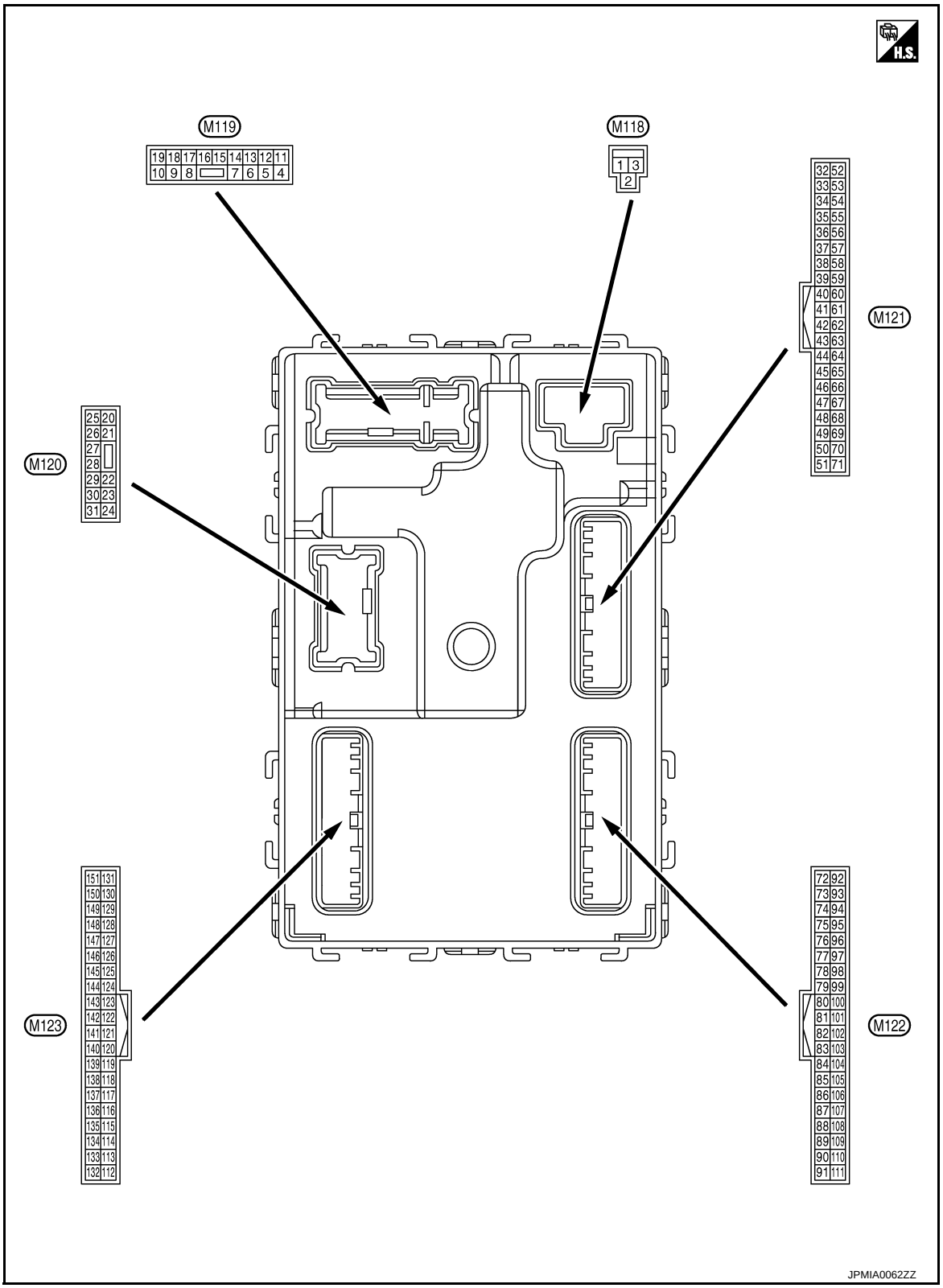

PHYSICAL VALUES

Terminal No. (Wire color)		Description		Condition		Value (Approx.)
+	–	Signal name	Input/ Output			
1 (W)	Ground	Battery power supply	Input	Ignition switch OFF		Battery voltage
2 (Y)	Ground	P/W power supply (BAT)	Output	Ignition switch OFF		12 V
3 (BG)	Ground	P/W power supply (RAP)	Output	Ignition switch ON		12 V
4 (LG)	Ground	Interior room lamp power supply	Output	Interior room lamp battery saver is activated. (Cuts the interior room lamp power supply)		0 V
				Interior room lamp battery saver is not activated. (Outputs the interior room lamp power supply)		12 V
5 (P)	Ground	Passenger door UNLOCK	Output	Passenger door	UNLOCK (Actuator is activated)	12 V
					Other than UNLOCK (Actuator is not activated)	0 V
7 (SB)	Ground	Step lamp	Output	Step lamp	ON	0 V
					OFF	12 V
8 (V)	Ground	All doors, fuel lid LOCK	Output	All doors, fuel lid	LOCK (Actuator is activated)	12 V
					Other than LOCK (Actuator is not activated)	0 V
9 (G)	Ground	Driver door, fuel lid UNLOCK	Output	Driver door, fuel lid	UNLOCK (Actuator is activated)	12 V
					Other than UNLOCK (Actuator is not activated)	0 V
11 (R)	Ground	Battery power supply	Input	Ignition switch OFF		Battery voltage
13 (B)	Ground	Ground	—	Ignition switch ON		0 V
14 (W)	Ground	Push-button ignition switch illumination ground	Output	Tail lamp	OFF	0 V
					ON	**NOTE:** When the illumination brightening/dimming level is in the neutral position. 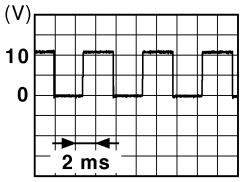 JSNIA0010GB
15 (BG)	Ground	ACC indicator lamp	Output	Ignition switch	OFF (LOCK indicator is not illuminated)	Battery voltage
					ACC	0 V

Terminal No. (Wire color)		Description		Condition		Value (Approx.)
+	–	Signal name	Input/ Output			
17 (W)	Ground	Turn signal RH (Front)	Output	Ignition switch ON	Turn signal switch OFF	0 V
					Turn signal switch RH	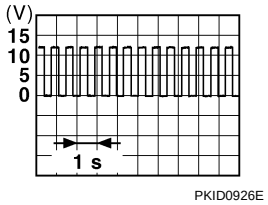 6.5 V
18 (BG)	Ground	Turn signal LH (Front)	Output	Ignition switch ON	Turn signal switch OFF	0 V
					Turn signal switch LH	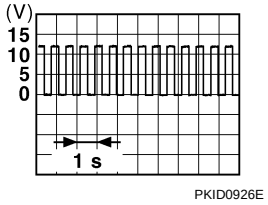 6.5 V
19 (V)	Ground	Interior room lamp control	Output	Interior room lamp	OFF	12 V
					ON	0 V
20 (V)	Ground	Turn signal RH (Rear)	Output	Ignition switch ON	Turn signal switch OFF	0 V
					Turn signal switch RH	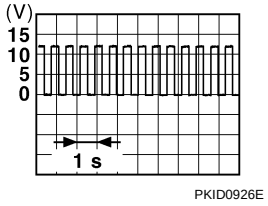 6.5 V
23 (LG)	Ground	Trunk lid open	Output	Trunk lid	OPEN (Trunk lid opener actuator is activated)	12 V
					Other than OPEN (Trunk lid opener actuator is not activated)	0 V
25 (Y)	Ground	Turn signal LH (Rear)	Output	Ignition switch ON	Turn signal switch OFF	0 V
					Turn signal switch LH	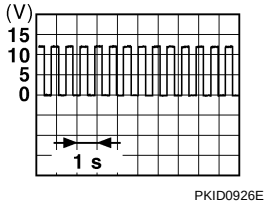 6.5 V
30 (P)	Ground	Trunk room lamp	Output	Trunk room lamp	ON	0 V
					OFF	12 V

Terminal No. (Wire color)		Description		Condition		Value (Approx.)
+	–	Signal name	Input/ Output			
34 (SB)	Ground	Trunk room antenna (–)	Output	Ignition switch OFF	When Intelligent Key is in the passenger compartment	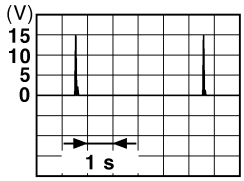 JMKIA0062GB
					When Intelligent Key is not in the passenger compartment	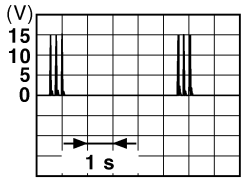 JMKIA0063GB
35 (V)	Ground	Trunk room antenna (+)	Output	Ignition switch OFF	When Intelligent Key is in the passenger compartment	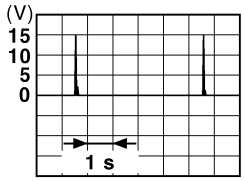 JMKIA0062GB
					When Intelligent Key is not in the passenger compartment	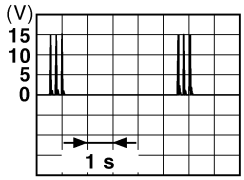 JMKIA0063GB
38 (B)	Ground	Rear bumper antenna (–)	Output	When the trunk lid opener request switch is operated with ignition switch OFF	When Intelligent Key is in the antenna detection area	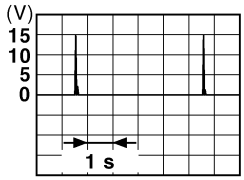 JMKIA0062GB
					When Intelligent Key is not in the antenna detection area	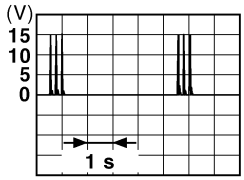 JMKIA0063GB

Terminal No. (Wire color)		Description		Condition		Value (Approx.)
+	–	Signal name	Input/ Output			
39 (W)	Ground	Rear bumper antenna (+)	Output	When the trunk lid opener request switch is operated with ignition switch OFF	When Intelligent Key is in the antenna detection area	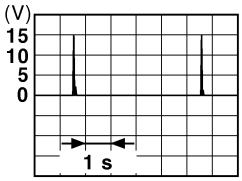 JMKIA0062GB
					When Intelligent Key is not in the antenna detection area	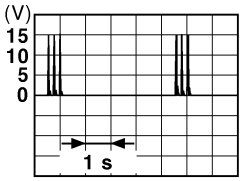 JMKIA0063GB
47 (Y)	Ground	Ignition relay (IPDM E/R) control	Output	Ignition switch	OFF or ACC	12 V
					ON	0 V
50 (BG)	Ground	Trunk room lamp switch	Input	Trunk room lamp switch	OFF (Trunk lid is closed)	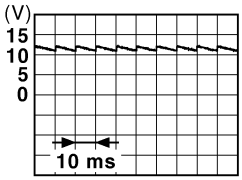 JPMIA0011GB 11.8 V
					ON (Trunk lid is opened)	0 V
52 (R)	Ground	Starter relay control	Output	Ignition switch ON (A/T models)	When selector lever is in P or N position	12 V
					When selector lever is not in P or N position	0 V
				Ignition switch ON (M/T models)	When the clutch pedal is depressed	Battery voltage
					When the clutch pedal is not depressed	0 V
60 (BR)	Ground	Push-button ignition switch (Push switch)	Input	Push-button ignition switch (Push switch)	Pressed	0 V
					Not pressed	Battery voltage
61 (SB)	Ground	Trunk lid opener request switch	Input	Trunk lid opener request switch	ON (Pressed)	0 V
					OFF (Not pressed)	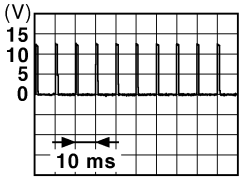 JPMIA0016GB 1.0 V
64 (G)	Ground	Intelligent Key warning buzzer (Engine room)	Output	Intelligent Key warning buzzer (Engine room)	Sounding	0 V
					Not sounding	12 V

Terminal No. (Wire color)		Description		Condition		Value (Approx.)
+	–	Signal name	Input/ Output			
67 (GR)	Ground	Trunk lid opener switch	Input	Trunk lid opener switch	Pressed	0 V
					Not pressed	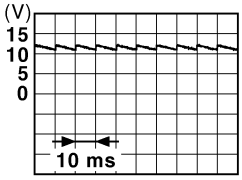 JPMIA0011GB 11.8 V
72 (R)	Ground	Room antenna 2 (–) (Center console)	Output	Ignition switch OFF	When Intelligent Key is in the passenger compartment	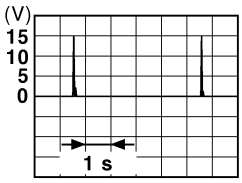 JMKIA0062GB
					When Intelligent Key is not in the passenger compartment	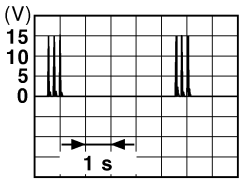 JMKIA0063GB
73 (G)	Ground	Room antenna 2 (+) (Center console)	Output	Ignition switch OFF	When Intelligent Key is in the passenger compartment	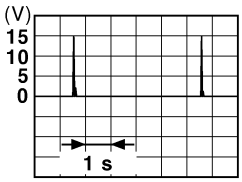 JMKIA0062GB
					When Intelligent Key is not in the passenger compartment	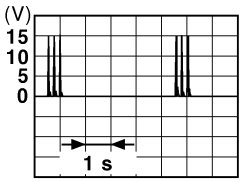 JMKIA0063GB

Terminal No. (Wire color)		Description		Condition		Value (Approx.)
+	–	Signal name	Input/ Output			
74 (SB)	Ground	Passenger door antenna (–)	Output	When the passenger door request switch is operated with ignition switch OFF	When Intelligent Key is in the antenna detection area	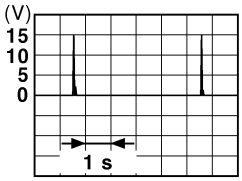 JMKIA0062GB
					When Intelligent Key is not in the antenna detection area	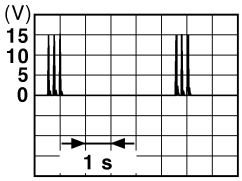 JMKIA0063GB
75 (BR)	Ground	Passenger door antenna (+)	Output	When the passenger door request switch is operated with ignition switch OFF	When Intelligent Key is in the antenna detection area	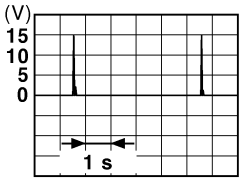 JMKIA0062GB
					When Intelligent Key is not in the antenna detection area	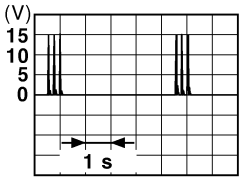 JMKIA0063GB
76 (V)	Ground	Driver door antenna (–)	Output	When the driver door request switch is operated with ignition switch OFF	When Intelligent Key is in the antenna detection area	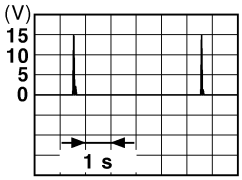 JMKIA0062GB
					When Intelligent Key is not in the antenna detection area	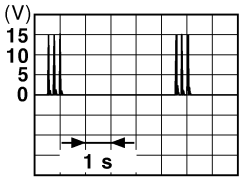 JMKIA0063GB

Terminal No. (Wire color)		Description		Condition		Value (Approx.)
+	–	Signal name	Input/ Output			
77 (LG)	Ground	Driver door antenna (+)	Output	When the driver door request switch is operated with ignition switch OFF	When Intelligent Key is in the antenna detection area	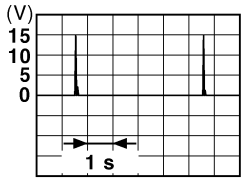 JMKIA0062GB
					When Intelligent Key is not in the antenna detection area	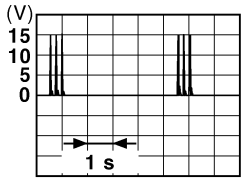 JMKIA0063GB
78 (Y)	Ground	Room antenna 1 (–) (Instrument panel)	Output	Ignition switch OFF	When Intelligent Key is in the passenger compartment	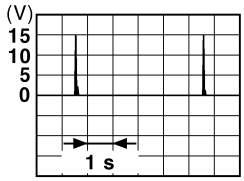 JMKIA0062GB
					When Intelligent Key is not in the passenger compartment	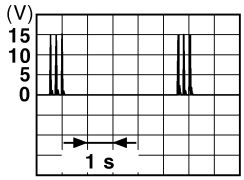 JMKIA0063GB
79 (BR)	Ground	Room antenna 1 (+) (Instrument panel)	Output	Ignition switch OFF	When Intelligent Key is in the passenger compartment	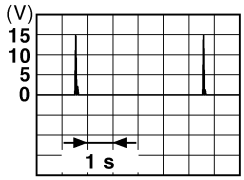 JMKIA0062GB
					When Intelligent Key is not in the passenger compartment	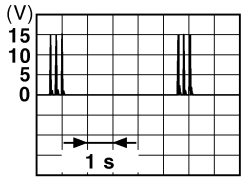 JMKIA0063GB

Terminal No. (Wire color)		Description		Condition		Value (Approx.)
+	–	Signal name	Input/ Output			
80 (GR)	Ground	NATS antenna amp.	Input/ Output	During waiting	Ignition switch is pressed while inserting the Intelligent Key into the key slot.	Just after pressing ignition switch. Pointer of tester should move.
81 (W)	Ground	NATS antenna amp.	Input/ Output	During waiting	Ignition switch is pressed while inserting the Intelligent Key into the key slot.	Just after pressing ignition switch. Pointer of tester should move.
82 (SB)	Ground	Ignition relay [Fuse block (J/B)] control	Output	Ignition switch	OFF or ACC	0 V
					ON	12 V
83 (Y)	Ground	Remote keyless entry receiver communication	Input/ Output	During waiting		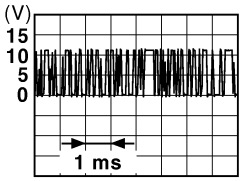 JMKIA0064GB
				When operating either button on the Intelligent Key		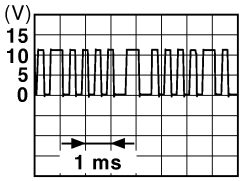 JMKIA0065GB
87 (Y)	Ground	Combination switch INPUT 5	Input	Combination switch	All switches OFF (Wiper volume dial 4)	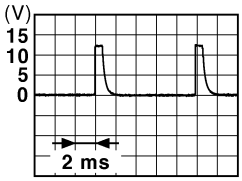 JPMIA0041GB 1.4 V
					Front fog lamp switch ON (Wiper volume dial 4)	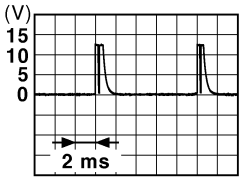 JPMIA0037GB 1.3 V
					Any of the conditions below with all switches OFF • Wiper volume dial 1 • Wiper volume dial 2 • Wiper volume dial 6 • Wiper volume dial 7	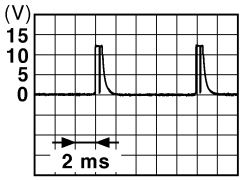 JPMIA0040GB 1.3 V

Terminal No. (Wire color)		Description		Condition		Value (Approx.)
+	–	Signal name	Input/ Output			
88 (BG)	Ground	Combination switch INPUT 3	Input	Combination switch	All switches OFF (Wiper volume dial 4)	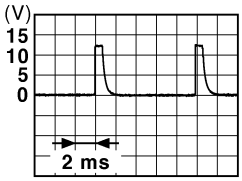 JPMIA0041GB 1.4 V
					Lighting switch HI (Wiper volume dial 4)	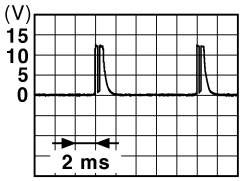 JPMIA0036GB 1.3 V
					Lighting switch 2ND (Wiper volume dial 4)	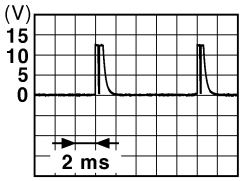 JPMIA0037GB 1.3 V
					Any of the conditions below with all switches OFF • Wiper volume dial 1 • Wiper volume dial 2 • Wiper volume dial 3	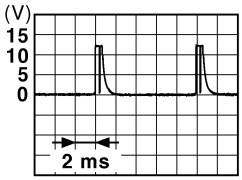 JPMIA0040GB 1.3 V
90 (P)	Ground	CAN-L	Input/ Output	—		—
91 (L)	Ground	CAN-H	Input/ Output	—		—
92 (LG)	Ground	Key slot illumination	Output	Key slot illumination	OFF	12 V
					Blinking	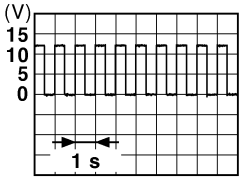 JPMIA0015GB 6.5 V
					ON	0 V
93 (GR)	Ground	ON indicator lamp	Output	Ignition switch	OFF (LOCK indicator is not illuminated)	Battery voltage
					ON	0 V

Terminal No. (Wire color)		Description		Condition		Value (Approx.)
+	–	Signal name	Input/ Output			
95 (BG)	Ground	ACC relay control	Output	Ignition switch	OFF	0 V
					ACC or ON	12 V
96 (GR)	Ground	A/T shift selector (Detention switch) power supply	Output	—		12 V
99 (R)*1 (BR)*2	Ground	Selector lever P position switch (A/T models)	Input	Selector lever	P position	0 V
					Any position other than P	12 V
		ASCD clutch switch (M/T models)		ASCD clutch switch	OFF (Clutch pedal is depressed)	0 V
					ON (Clutch pedal is not depressed)	12 V
100 (Y)	Ground	Passenger door request switch	Input	Passenger door request switch	ON (Pressed)	0 V
					OFF (Not pressed)	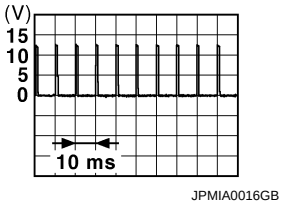 1.0 V
101 (P)	Ground	Driver door request switch	Input	Driver door request switch	ON (Pressed)	0 V
					OFF (Not pressed)	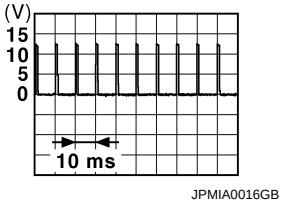 1.0 V
102 (BG)	Ground	Blower fan motor relay control	Output	Ignition switch	OFF or ACC	0 V
					ON	12 V
103 (P)	Ground	Remote keyless entry receiver power supply	Output	Ignition switch OFF		12 V

Terminal No. (Wire color)		Description		Condition		Value (Approx.)
+	–	Signal name	Input/ Output			
107 (LG)	Ground	Combination switch INPUT 1	Input	Combination switch (Wiper volume dial 4)	All switches OFF	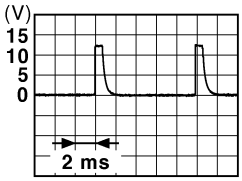 JPMIA0041GB 1.4 V
					Turn signal switch LH	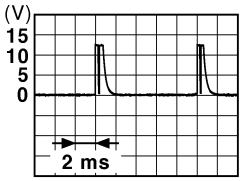 JPMIA0037GB 1.3 V
					Turn signal switch RH	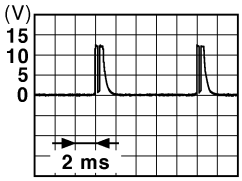 JPMIA0036GB 1.3 V
					Front wiper switch LO	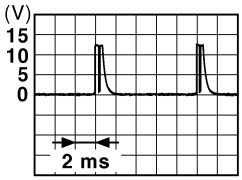 JPMIA0038GB 1.3 V
					Front washer switch ON	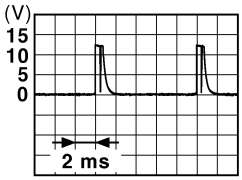 JPMIA0039GB 1.3 V

Terminal No. (Wire color)		Description		Condition		Value (Approx.)
+	–	Signal name	Input/ Output			
108 (R)	Ground	Combination switch INPUT 4	Input	Combination switch	All switches OFF (Wiper volume dial 4)	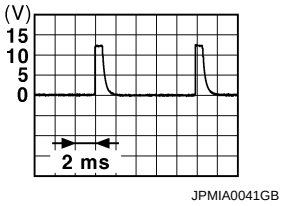 1.4 V
					Lighting switch AUTO (Wiper volume dial 4)	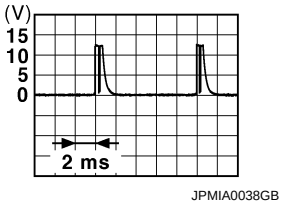 1.3 V
					Lighting switch 1ST (Wiper volume dial 4)	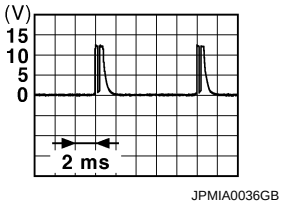 1.3 V
					Any of the conditions below with all switches OFF • Wiper volume dial 1 • Wiper volume dial 5 • Wiper volume dial 6	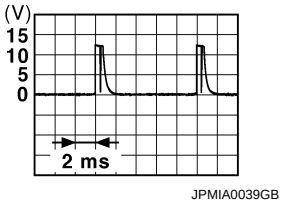 1.3 V

Terminal No. (Wire color)		Description		Condition		Value (Approx.)
+	–	Signal name	Input/ Output			
109 (W)	Ground	Combination switch INPUT 2	Input	Combination switch (Wiper volume dial 4)	All switches OFF	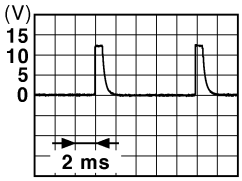 JPMIA0041GB 1.4 V
					Lighting switch PASS	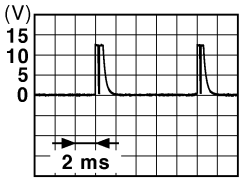 JPMIA0037GB 1.3 V
					Lighting switch 2ND	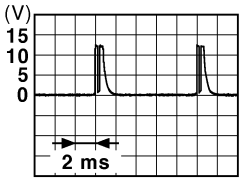 JPMIA0036GB 1.3 V
					Front wiper switch INT/ AUTO	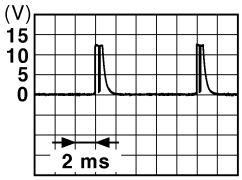 JPMIA0038GB 1.3 V
					Front wiper switch HI	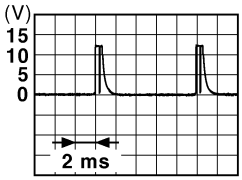 JPMIA0040GB 1.3 V
110 (G)	Ground	Hazard switch	Input	Hazard switch	ON	0 V
					OFF	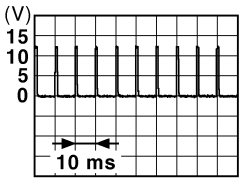 JPMIA0012GB 1.1 V

Terminal No. (Wire color)		Description		Condition		Value (Approx.)
+	–	Signal name	Input/ Output			
112 (R)	Ground	Rain sensor serial link	Input/ Output	Ignition switch ON		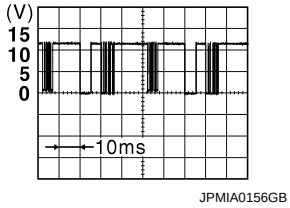 8.7 V
113 (BG)	Ground	Optical sensor	Input	Ignition switch ON	When bright outside of the vehicle	Close to 5 V
					When dark outside of the vehicle	Close to 0 V
114 (R)	Ground	Clutch interlock switch	Input	Clutch interlock switch	OFF (Clutch pedal is not depressed)	0 V
					ON (Clutch pedal is de-pressed)	Battery voltage
116 (SB)	Ground	Stop lamp switch 1	Input	—		Battery voltage
118 (BR)	Ground	Stop lamp switch 2 (Without ICC)	Input	Stop lamp switch	OFF (Brake pedal is not depressed)	0 V
					ON (Brake pedal is de-pressed)	Battery voltage
		Stop lamp switch 2 (With ICC)		Stop lamp switch OFF (Brake pedal is not depressed) and ICC brake hold relay OFF		0 V
				Stop lamp switch ON (Brake pedal is de-pressed) or ICC brake hold relay ON		Battery voltage
119 (SB)	Ground	Driver side door lock assembly (Unlock sensor)	Input	Driver door	LOCK status (Unlock sensor switch OFF)	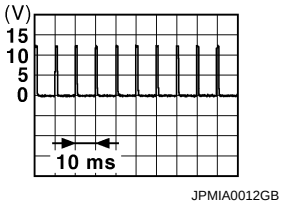 1.1 V
					UNLOCK status (Unlock switch sensor ON)	0 V
121 (SB)	Ground	Key slot switch	Input	When the Intelligent Key is inserted into key slot		12 V
				When the Intelligent Key is not inserted into key slot		0 V
123 (V)	Ground	IGN feedback	Input	Ignition switch	OFF or ACC	0 V
					ON	Battery voltage

Terminal No. (Wire color)		Description		Condition		Value (Approx.)
+	–	Signal name	Input/ Output			
124 (R)	Ground	Passenger door switch	Input	Passenger door switch	OFF (Door close)	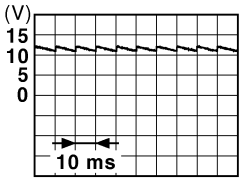 JPMIA0011GB 11.8 V
					ON (Door open)	0 V
129 (BG)	Ground	Trunk lid opener cancel switch	Input	Trunk lid opener cancel switch	CANCEL	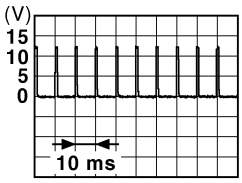 JPMIA0012GB 1.1 V
					ON	0 V
132 (V)	Ground	Power window switch communication	Input/ Output	Ignition switch ON		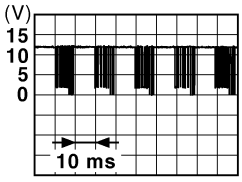 JPMIA0013GB 10.2 V
				Ignition switch OFF or ACC		12 V
133 (L)	Ground	Push-button ignition switch illumination	Output	Push-button ignition switch illumination	ON (Tail lamps OFF)	9.5 V
					ON (Tail lamps ON)	**NOTE:** The pulse width of this wave is varied by the illumination brightening/dimming level. 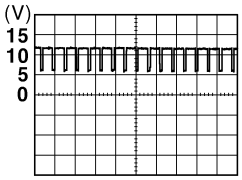 JPMIA0159GB
					OFF	0 V
134 (LG)	Ground	LOCK indicator lamp	Output	LOCK indicator lamp	OFF	Battery voltage
					ON	0 V
137 (BG)	Ground	Receiver and sensor ground	Input	Ignition switch ON		0 V
138 (V)	Ground	Receiver and sensor power supply	Output	Ignition switch	OFF	0 V
					ACC or ON	5.0 V

Terminal No. (Wire color)		Description		Condition		Value (Approx.)
+	–	Signal name	Input/ Output			
139 (L)	Ground	Tire pressure receiver communication	Input/ Output	Ignition switch ON	Standby state	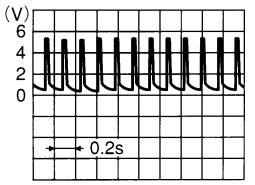 OCC3881D
					When receiving the signal from the transmitter	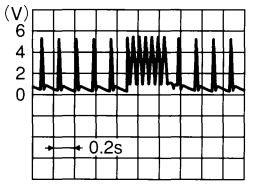 OCC3880D
140*1 (B)	Ground	Selector lever P/N position	Input	Selector lever	P or N position	12 V
					Except P and N positions	0 V
141 (W)	Ground	Security indicator lamp	Output	Security indicator lamp	ON	0 V
					Blinking	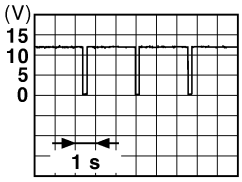 JPMIA0014GB 11.3 V
					OFF	12 V
142 (BR)	Ground	Combination switch OUTPUT 5	Output	Combination switch (Wiper volume dial 4)	All switches OFF	0 V
					Lighting switch 1ST	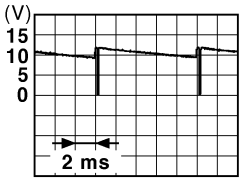 JPMIA0031GB 10.7 V
					Lighting switch HI	
					Lighting switch 2ND	
					Turn signal switch RH	
143 (P)	Ground	Combination switch OUTPUT 1	Output	Combination switch	All switches OFF (Wiper volume dial 4)	0 V
					Front wiper switch HI (Wiper volume dial 4)	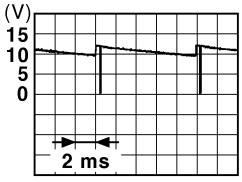 JPMIA0032GB 10.7 V
					Any of the conditions below with all switches OFF • Wiper volume dial 1 • Wiper volume dial 2 • Wiper volume dial 3 • Wiper volume dial 6 • Wiper volume dial 7	

Terminal No. (Wire color)		Description		Condition		Value (Approx.)
+	–	Signal name	Input/ Output			
144 (G)	Ground	Combination switch OUTPUT 2	Output	Combination switch	All switches OFF (Wiper volume dial 4)	0 V
					Front washer switch ON (Wiper volume dial 4)	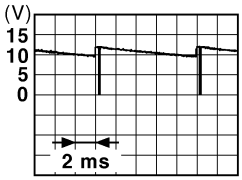 JPMIA0033GB 10.7 V
					Any of the conditions below with all switches OFF • Wiper volume dial 1 • Wiper volume dial 5 • Wiper volume dial 6	
145 (L)	Ground	Combination switch OUTPUT 3	Output	Combination switch (Wiper volume dial 4)	All switches OFF	0 V
					Front wiper switch INT/ AUTO	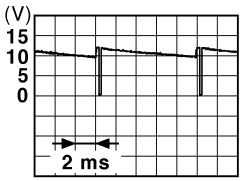 JPMIA0034GB 10.7 V
					Front wiper switch LO	
					Lighting switch AUTO	
146 (SB)	Ground	Combination switch OUTPUT 4	Output	Combination switch (Wiper volume dial 4)	All switches OFF	0 V
					Front fog lamp switch ON	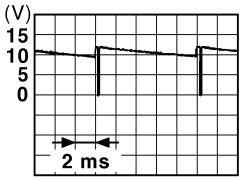 JPMIA0035GB 10.7 V
					Lighting switch 2ND	
					Lighting switch PASS	
					Turn signal switch LH	
150 (GR)	Ground	Driver door switch	Input	Driver door switch	OFF (Door close)	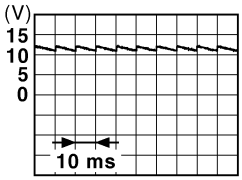 JPMIA0011GB 11.8 V
					ON (Door open)	0 V
151 (G)	Ground	Rear window defogger relay control	Output	Rear window defogger	Active	0 V
					Not activated	Battery voltage

- *1: A/T models
- *2: M/T models

Wiring Diagram - BCM -

INFOID:0000000008793431

For connector terminal arrangements, harness layouts, and alphabets in a ⬡ (option abbreviation; if not described in wiring diagram), refer to GI-12, "Connector Information".

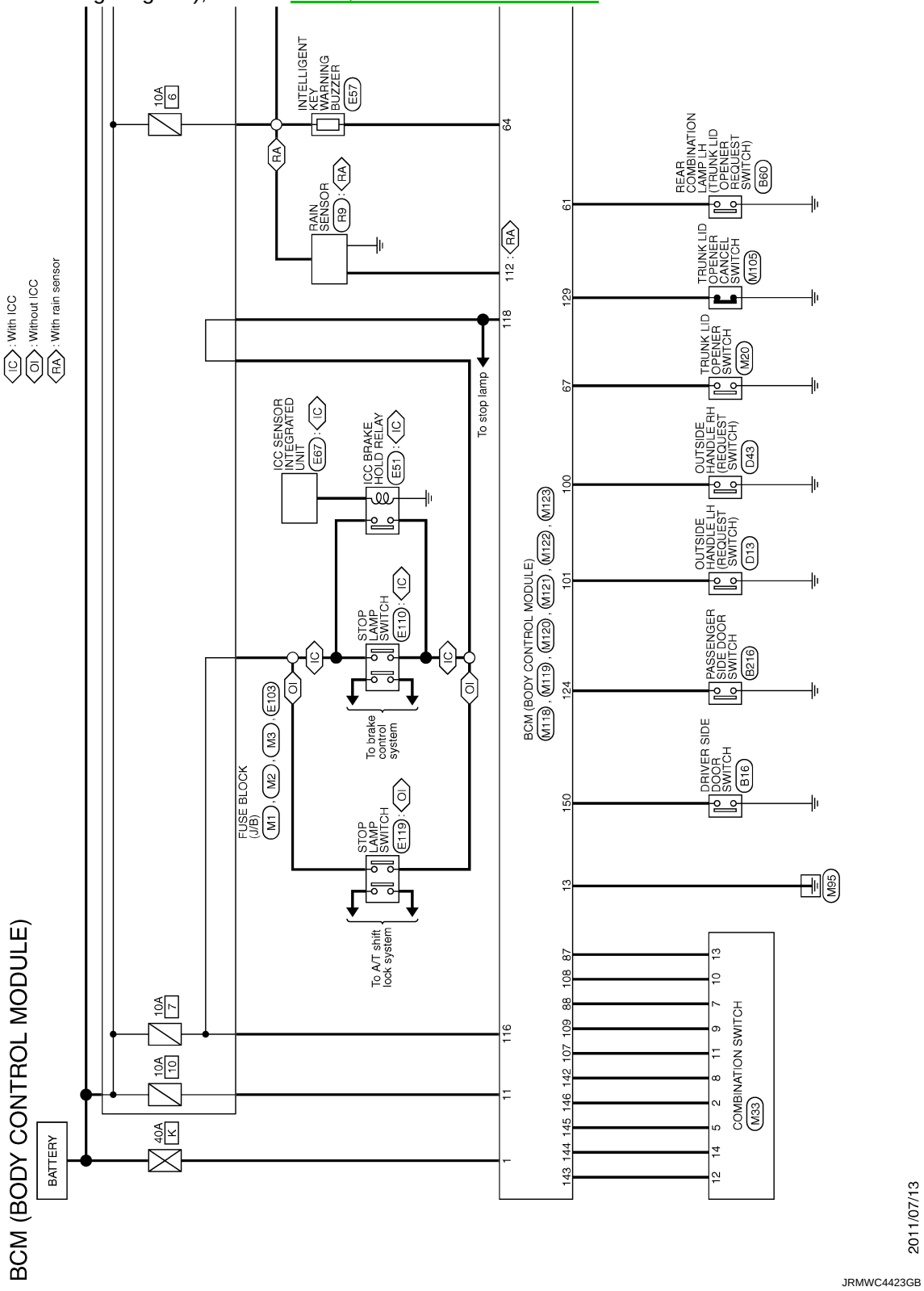

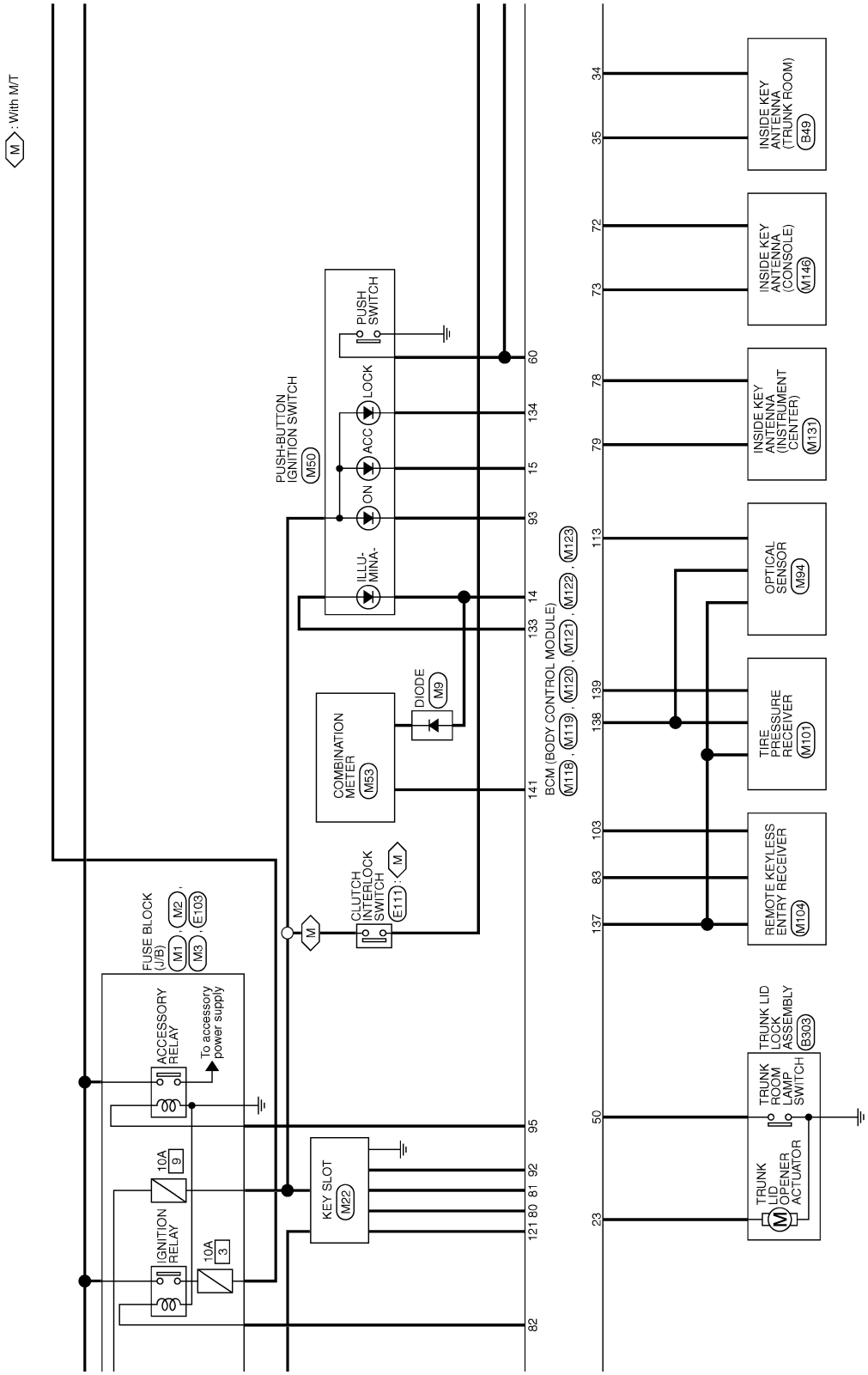
M : With M/T
FUSE BLOCK (J/B)
M1 , M2 , M3 , E103
ACCESSORY RELAY
To accessory power supply
IGNITION RELAY
10A 9
10A 3
KEY SLOT M22
CLUTCH INTERLOCK SWITCH E111 : M
COMBINATION METER M53
DIODE M9
PUSH-BUTTON IGNITION SWITCH M50
ILLU-MINA-
ON
ACC
LOCK
PUSH SWITCH
BCM (BODY CONTROL MODULE) M118 , M119 , M120 , M121 , M122 , M123
TRUNK LID OPENER ACTUATOR
TRUNK ROOM LAMP SWITCH
TRUNK LID LOCK ASSEMBLY B303
REMOTE KEYLESS ENTRY RECEIVER M104
TIRE PRESSURE RECEIVER M101
OPTICAL SENSOR M94
INSIDE KEY ANTENNA (INSTRUMENT CENTER) M131
INSIDE KEY ANTENNA (CONSOLE) M146
INSIDE KEY ANTENNA (TRUNK ROOM) B49
JRMWC4424GB

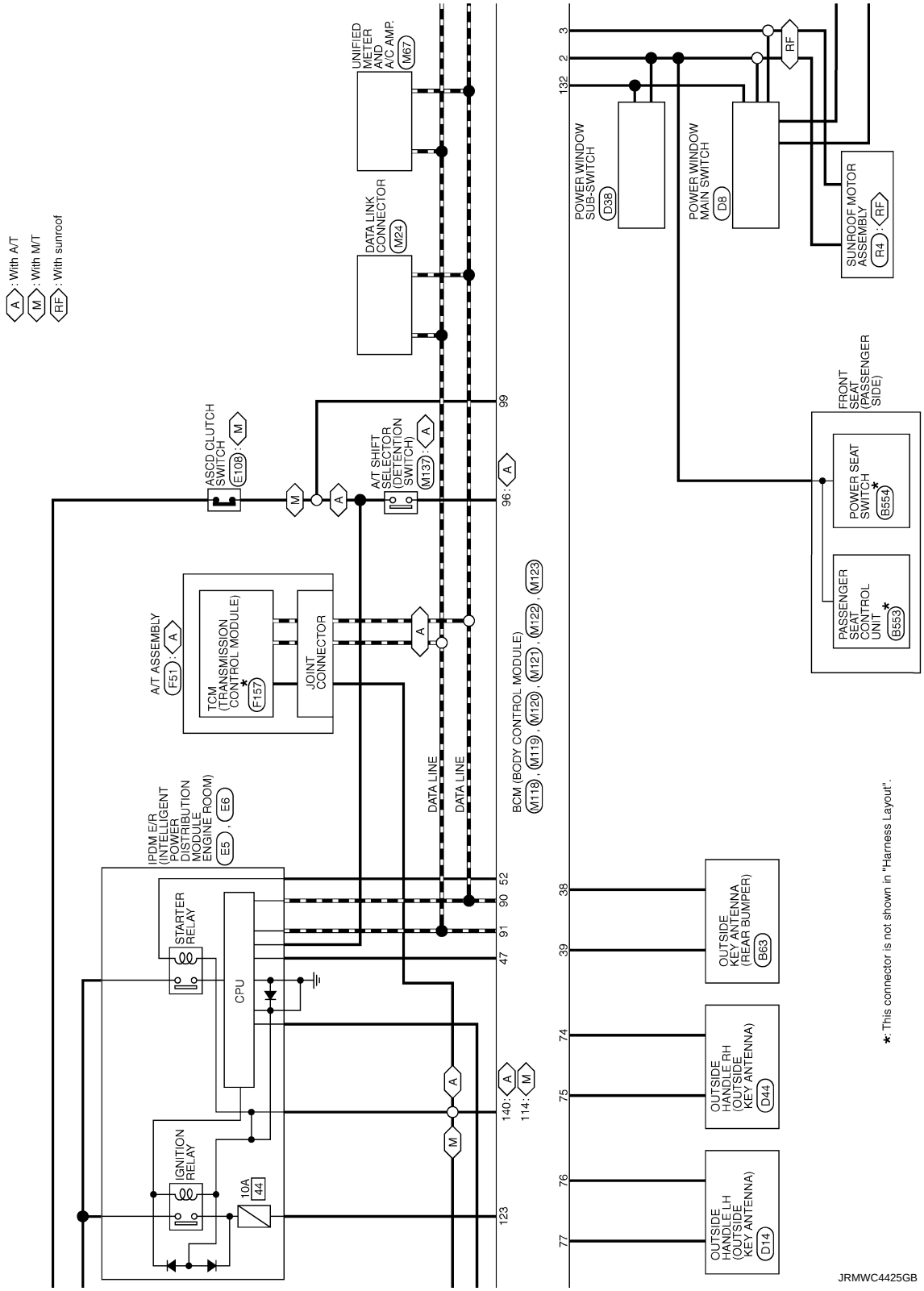
A : With A/T
M : With M/T
RF : With sunroof
UNIFIED METER AND A/C AMP. (M67)
DATA LINK CONNECTOR (M24)
ASCD CLUTCH SWITCH (E108) : M
A/T SHIFT SELECTOR (DETENTION SWITCH) (M137) : A
A/T ASSEMBLY (F51) : A
TCM (TRANSMISSION CONTROL MODULE)* (F157)
JOINT CONNECTOR
IPDM E/R (INTELLIGENT POWER DISTRIBUTION MODULE ENGINE ROOM) (E5) , (E6)
STARTER RELAY
CPU
IGNITION RELAY
10A 44
DATA LINE
DATA LINE
BCM (BODY CONTROL MODULE) (M118) , (M119) , (M120) , (M121) , (M122) , (M123)
99
96 : A
52
90
91
47
140 : A
114 : M
123
POWER WINDOW SUB-SWITCH (D38)
POWER WINDOW MAIN SWITCH (D8)
SUNROOF MOTOR ASSEMBLY (R4) : RF
FRONT SEAT (PASSENGER SIDE)
POWER SEAT SWITCH* (B554)
PASSENGER SEAT CONTROL UNIT* (B553)
OUTSIDE KEY ANTENNA (REAR BUMPER) (B63)
OUTSIDE HANDLE RH (OUTSIDE KEY ANTENNA) (D44)
OUTSIDE HANDLE LH (OUTSIDE KEY ANTENNA) (D14)
3
2
132
38
39
74
75
76
77
*: This connector is not shown in "Harness Layout".
JRMWC4425GB

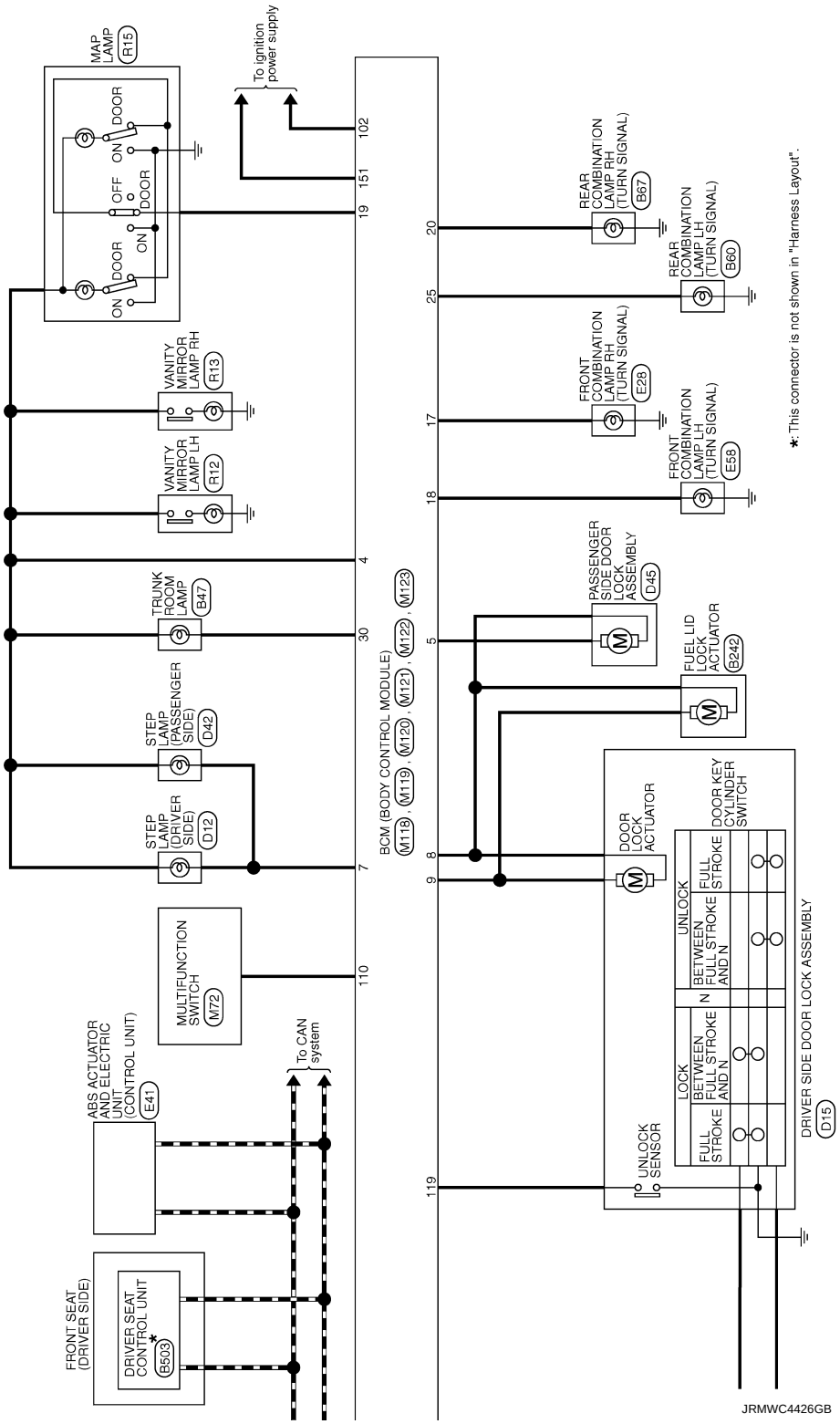

Fail-safe

INFOID:0000000008793432

FAIL-SAFE CONTROL BY DTC

BCM performs fail-safe control when any DTC are detected.

Display contents of CONSULT	Fail-safe	Cancellation
B2190: NATS ANTENNA AMP	Inhibit engine cranking	Erase DTC
B2191: DIFFERENCE OF KEY	Inhibit engine cranking	Erase DTC
B2192: ID DISCORD BCM-ECM	Inhibit engine cranking	Erase DTC
B2193: CHAIN OF BCM-ECM	Inhibit engine cranking	Erase DTC
B2195: ANTI-SCANNING	Inhibit engine cranking	Ignition switch ON → OFF
B2560: STARTER CONT RELAY	Inhibit engine cranking	500 ms after the following CAN signal communication status becomes consistent • Starter control relay signal • Starter relay status signal
B2608: STARTER RELAY	Inhibit engine cranking	500 ms after the following signal communication status becomes consistent • Starter motor relay control signal • Starter relay status signal (CAN)
B260A: IGNITION RELAY	Inhibit engine cranking	500 ms after the following conditions are fulfilled • IGN relay (IPDM E/R) control signal: OFF (12 V) • Ignition ON signal (CAN to IPDM E/R): OFF (Request signal) • Ignition ON signal (CAN from IPDM E/R): OFF (Condition signal)
B260F: ENG STATE SIG LOST	Maintains the power supply position attained at the time of DTC detection	When any of the following conditions are fulfilled • Power position changes to ACC • Receives engine status signal (CAN)
B2617: BCM	Inhibit engine cranking	1 second after the starter motor relay control inside BCM becomes normal
B2618: BCM	Inhibit engine cranking	1 second after the ignition relay (IPDM E/R) control inside BCM becomes normal
B261E: VEHICLE TYPE	Inhibit engine cranking	BCM initialization
B26E8: CLUTCH SW	Inhibit engine cranking	When any of the following BCM recognition conditions are fulfilled • Status 1 - Clutch switch signal (CAN from ECM): ON - Clutch interlock switch signal: OFF (0 V) • Status 2 - Clutch switch signal (CAN from ECM): OFF - Clutch interlock switch signal: ON (Battery voltage)

DTC Inspection Priority Chart

INFOID:0000000008793433

If some DTCs are displayed at the same time, perform inspections one by one based on the following priority chart.

Priority	DTC
1	B2562: LOW VOLTAGE
2	• U1000: CAN COMM • U1010: CONTROL UNIT(CAN)
3	• B2190: NATS ANTENNA AMP • B2191: DIFFERENCE OF KEY • B2192: ID DISCORD BCM-ECM • B2193: CHAIN OF BCM-ECM • B2195: ANTI-SCANNING

Priority	DTC
4	• B2553: IGNITION RELAY • B2555: STOP LAMP • B2556: PUSH-BTN IGN SW • B2557: VEHICLE SPEED • B2560: STARTER CONT RELAY • B2601: SHIFT POSITION • B2602: SHIFT POSITION • B2603: SHIFT POSI STATUS • B2604: PNP/CLUTCH SW • B2605: PNP/CLUTCH SW • B2608: STARTER RELAY • B260A: IGNITION RELAY • B260F: ENG STATE SIG LOST • B2614: BCM • B2615: BCM • B2616: BCM • B2617: BCM • B2618: BCM • B261A: PUSH-BTN IGN SW • B261E: VEHICLE TYPE • B26E8: CLUTCH SW • B26EA: KEY REGISTRATION • C1729: VHCL SPEED SIG ERR • U0415: VEHICLE SPEED
5	• C1704: LOW PRESSURE FL • C1705: LOW PRESSURE FR • C1706: LOW PRESSURE RR • C1707: LOW PRESSURE RL • C1708: [NO DATA] FL • C1709: [NO DATA] FR • C1710: [NO DATA] RR • C1711: [NO DATA] RL • C1716: [PRESSDATA ERR] FL • C1717: [PRESSDATA ERR] FR • C1718: [PRESSDATA ERR] RR • C1719: [PRESSDATA ERR] RL • C1734: CONTROL UNIT
6	• B2621: INSIDE ANTENNA • B2622: INSIDE ANTENNA • B2623: INSIDE ANTENNA

DTC Index

INFOID:0000000008793434

NOTE:
The details of time display are as follows.
- CRNT: A malfunction is detected now.
- PAST: A malfunction was detected in the past.

IGN counter is displayed on Freeze Frame Data. For details of Freeze Frame Data, refer to DLK-46, "COMMON ITEM : CONSULT Function (BCM - COMMON ITEM)".

CONSULT display	Fail-safe	Freeze Frame Data •Vehicle Speed •Odo/Trip Meter •Vehicle condition	Intelligent Key warning lamp ON	Tire pressure monitor warning lamp ON	Reference page
No DTC is detected. further testing may be required.	—	—	—	—	—
U1000: CAN COMM	—	—	—	—	BCS-36
U1010: CONTROL UNIT(CAN)	—	—	—	—	BCS-37
U0415: VEHICLE SPEED	—	—	—	—	BCS-38
B2190: NATS ANTENNA AMP	×	—	—	—	SEC-51

CONSULT display	Fail-safe	Freeze Frame Data •Vehicle Speed •Odo/Trip Meter •Vehicle condition	Intelligent Key warning lamp ON	Tire pressure monitor warning lamp ON	Refer-ence page
B2191: DIFFERENCE OF KEY	×	—	—	—	SEC-54
B2192: ID DISCORD BCM-ECM	×	—	—	—	SEC-55
B2193: CHAIN OF BCM-ECM	×	—	—	—	SEC-57
B2195: ANTI-SCANNING	×	—	—	—	SEC-58
B2553: IGNITION RELAY	—	×	—	—	PCS-48
B2555: STOP LAMP	—	×	—	—	SEC-59
B2556: PUSH-BTN IGN SW	—	×	×	—	SEC-61
B2557: VEHICLE SPEED	×	×	×	—	SEC-63
B2560: STARTER CONT RELAY	×	×	×	—	SEC-64
B2562: LOW VOLTAGE	—	×	—	—	BCS-39
B2601: SHIFT POSITION	×	×	×	—	SEC-65
B2602: SHIFT POSITION	×	×	×	—	SEC-68
B2603: SHIFT POSI STATUS	×	×	×	—	SEC-70
B2604: PNP/CLUTCH SW	×	×	×	—	SEC-73
B2605: PNP/CLUTCH SW	×	×	×	—	SEC-75
B2608: STARTER RELAY	×	×	×	—	SEC-77
B260A: IGNITION RELAY	×	×	×	—	PCS-50
B260F: ENG STATE SIG LOST	×	×	×	—	SEC-79
B2614: BCM	—	×	×	—	PCS-52
B2615: BCM	—	×	×	—	PCS-54
B2616: BCM	—	×	×	—	PCS-56
B2617: BCM	×	×	×	—	SEC-83
B2618: BCM	×	×	×	—	PCS-58
B261A: PUSH-BTN IGN SW	—	×	×	—	PCS-59
B261E: VEHICLE TYPE	×	×	× (Turn ON for 15 seconds)	—	SEC-85
B2621: INSIDE ANTENNA	—	×	—	—	DLK-55
B2622: INSIDE ANTENNA	—	×	—	—	DLK-57
B2623: INSIDE ANTENNA	—	×	—	—	DLK-59
B26E8: CLUTCH SW	×	×	×	—	SEC-80
B26EA: KEY REGISTRATION	—	×	× (Turn ON for 15 seconds)	—	SEC-82
C1704: LOW PRESSURE FL	—	—	—	×	WT-19
C1705: LOW PRESSURE FR	—	—	—	×	
C1706: LOW PRESSURE RR	—	—	—	×	
C1707: LOW PRESSURE RL	—	—	—	×	
C1708: [NO DATA] FL	—	—	—	×	WT-21
C1709: [NO DATA] FR	—	—	—	×	
C1710: [NO DATA] RR	—	—	—	×	
C1711: [NO DATA] RL	—	—	—	×	

CONSULT display	Fail-safe	Freeze Frame Data •Vehicle Speed •Odo/Trip Meter •Vehicle condition	Intelligent Key warning lamp ON	Tire pressure monitor warning lamp ON	Refer-ence page
C1716: [PRESSDATA ERR] FL	—	—	—	×	WT-24
C1717: [PRESSDATA ERR] FR	—	—	—	×	
C1718: [PRESSDATA ERR] RR	—	—	—	×	
C1719: [PRESSDATA ERR] RL	—	—	—	×	
C1729: VHCL SPEED SIG ERR	—	—	—	×	WT-25
C1734: CONTROL UNIT	—	—	—	×	WT-26

SYMPTOM DIAGNOSIS

DOOR DOES NOT LOCK/UNLOCK WITH DOOR LOCK AND UNLOCK SWITCH

ALL DOOR

ALL DOOR : Description

INFOID:0000000008160654

All doors do not lock/unlock using door lock and unlock switch.

ALL DOOR : Diagnosis Procedure

INFOID:0000000008160655

1.CHECK POWER SUPPLY AND GROUND CIRCUIT

Check power supply and ground circuit.
Refer to DLK-61, "BCM (BODY CONTROL MODULE) : Diagnosis Procedure".

Is the inspection result normal?

YES >> GO TO 2.
NO >> Repair or replace the malfunctioning parts.

2.CHECK DOOR LOCK AND UNLOCK SWITCH

Check door lock and unlock switch.
- Driver side: Refer to DLK-64, "DRIVER SIDE : Component Function Check".
- Passenger side: Refer to DLK-64, "PASSENGER SIDE : Component Function Check".

Is the inspection result normal?

YES >> GO TO 3.
NO >> Repair or replace the malfunctioning parts.

3.CHECK DOOR LOCK ACTUATOR

Check door lock actuator (driver side).
Refer to DLK-66, "DRIVER SIDE : Component Function Check".

Is the inspection result normal?

YES >> GO TO 4.
NO >> Repair or replace the malfunctioning parts.

4.CONFIRM THE OPERATION

Confirm the operation again.

Is the result normal?

YES >> Check intermittent incident. Refer to GI-43, "Intermittent Incident".
NO >> GO TO 1.

DRIVER SIDE

DRIVER SIDE : Description

INFOID:0000000008160656

Driver side door does not lock/unlock using door lock and unlock switch.

DRIVER SIDE : Diagnosis Procedure

INFOID:0000000008160657

1.CHECK DOOR LOCK ACTUATOR

Check door lock actuator (driver side).
Refer to DLK-66, "DRIVER SIDE : Component Function Check".

Is the inspection result normal?

YES >> GO TO 2.
NO >> Repair or replace the malfunctioning parts.

2.CONFIRM THE OPERATION

Confirm the operation again.

Is the result normal?

YES >> Check intermittent incident. Refer to GI-43, "Intermittent Incident".
NO >> GO TO 1.

PASSENGER SIDE

PASSENGER SIDE : Description

INFOID:0000000008160658

Passenger side door does not lock/unlock using door lock and unlock switch.

PASSENGER SIDE : Diagnosis Procedure

INFOID:0000000008160659

1. CHECK DOOR LOCK ACTUATOR

Check door lock actuator (passenger side).
Refer to DLK-67, "PASSENGER SIDE : Component Function Check".

Is the inspection result normal?

YES >> GO TO 2.
NO >> Repair or replace the malfunctioning parts.

2. CONFIRM THE OPERATION

Confirm the operation again.

Is the result normal?

YES >> Check intermittent incident. Refer to GI-43, "Intermittent Incident".
NO >> GO TO 1.

DOOR DOES NOT LOCK/UNLOCK WITH DOOR KEY CYLINDER OPERATION

Description

INFOID:0000000008160660

All doors do not lock/unlock using driver side door key cylinder.

Diagnosis Procedure

INFOID:0000000008160661

1. CHECK POWER DOOR LOCK OPERATION

Check power door lock operation.

Does door lock/unlock with door lock and unlock switch?

YES >> GO TO 2.
NO >> Refer to DLK-144, "ALL DOOR : Diagnosis Procedure".

2. CHECK DOOR KEY CYLINDER SWITCH

Check door key cylinder switch.
Refer to DLK-73, "Component Function Check".

Is the inspection result normal?

YES >> GO TO 3.
NO >> Repair or replace the malfunctioning parts.

3. CONFIRM THE OPERATION

Confirm the operation again.

Is the result normal?

YES >> Check intermittent incident. Refer to GI-43, "Intermittent Incident".
NO >> GO TO 1.

DOOR DOES NOT LOCK/UNLOCK WITH DOOR REQUEST SWITCH

ALL DOOR

ALL DOOR : Description

INFOID:0000000008160662

All doors do not lock/unlock using all door request switches.

NOTE:

Check door request switch operation in the door lock condition. Refer to DLK-19, "DOOR LOCK FUNCTION : System Description".

ALL DOOR : Diagnosis Procedure

INFOID:0000000008160663

1. CHECK REMOTE KEYLESS ENTRY FUNCTION

Check remote keyless entry function.

Does door lock/unlock with Intelligent Key button?

YES >> GO TO 2.
NO >> Refer to DLK-28, "REMOTE KEYLESS ENTRY FUNCTION : System Description".

2. CHECK “LOCK/UNLOCK BY I-KEY” SETTING IN “WORK SUPPORT”

Check “LOCK/UNLOCK BY I-KEY” in “WORK SUPPORT”.
Refer to DLK-49, "INTELLIGENT KEY : CONSULT Function (BCM - INTELLIGENT KEY)".

Is the inspection result normal?

YES >> GO TO 3.
NO >> Set “LOCK/UNLOCK BY I-KEY” in “WORK SUPPORT”.

3. CONFIRM THE OPERATION

Confirm the operation again.

Is the result normal?

YES >> Check intermittent incident. Refer to GI-43, "Intermittent Incident".
NO >> GO TO 1.

DRIVER SIDE

DRIVER SIDE : Description

INFOID:0000000008160664

All doors do not lock/unlock using driver side door request switch.

NOTE:

Check door request switch operation in the door lock condition. Refer to DLK-19, "DOOR LOCK FUNCTION : System Description".

DRIVER SIDE : Diagnosis Procedure

INFOID:0000000008160665

1. CHECK DRIVER SIDE DOOR REQUEST SWITCH

Check driver side door request switch.
Refer to DLK-84, "Component Function Check".

Is the inspection result normal?

YES >> GO TO 2.
NO >> Repair or replace the malfunctioning parts.

2. CHECK OUTSIDE KEY ANTENNA LH

Check outside key antenna LH.
Refer to DLK-88, "Component Function Check".

Is the inspection result normal?

YES >> GO TO 3.
NO >> Repair or replace the malfunctioning parts.

3. CONFIRM THE OPERATION

Confirm the operation again.

Is the result normal?

YES >> Check Intermittent Incident. Refer to GI-43, "Intermittent Incident".
NO >> GO TO 1.

PASSENGER SIDE

PASSENGER SIDE : Description

INFOID:0000000008160666

All doors do not lock/unlock using passenger side door request switch.

NOTE:

Check door request switch operation in the door lock condition. Refer to DLK-19, "DOOR LOCK FUNCTION : System Description".

PASSENGER SIDE : Diagnosis Procedure

INFOID:0000000008160667

1. CHECK PASSENGER SIDE DOOR REQUEST SWITCH

Check passenger side door request switch.
Refer to DLK-84, "Component Function Check".

Is the inspection result normal?

YES >> GO TO 2.
NO >> Repair or replace the malfunctioning parts.

2. CHECK OUTSIDE KEY ANTENNA RH

Check outside key antenna RH.
Refer to DLK-88, "Component Function Check".

Is the inspection result normal?

YES >> GO TO 3.
NO >> Repair or replace the malfunctioning parts.

3. CONFIRM THE OPERATION

Confirm the operation again.

Is the result normal?

YES >> Check Intermittent Incident. Refer to GI-43, "Intermittent Incident".
NO >> GO TO 1.

DOOR DOES NOT LOCK/UNLOCK WITH INTELLIGENT KEY

Description

INFOID:0000000008160668

All doors do not lock/unlock using Intelligent Key.

NOTE:

Check Intelligent Key remote operation in the door lock condition. Refer to DLK-28, "REMOTE KEYLESS ENTRY FUNCTION : System Description".

Diagnosis Procedure

INFOID:0000000008160669

1. CHECK POWER DOOR LOCK OPERATION

Check power door lock operation.

Does door lock/unlock with door lock and unlock switch?

YES >> GO TO 2.
NO >> Refer to DLK-144, "ALL DOOR : Diagnosis Procedure".

2. CHECK REMOTE KEYLESS ENTRY RECEIVER

Check remote keyless entry receiver.
Refer to DLK-75, "Component Function Check".

Is the inspection result normal?

YES >> GO TO 3.
NO >> Repair or replace the malfunctioning parts.

3. CHECK INTELLIGENT KEY

Check Intelligent Key.
Refer to DLK-93, "Component Function Check".

Is the inspection result normal?

YES >> GO TO 4.
NO >> Repair or replace the malfunctioning parts.

4. CHECK KEY SLOT

Check key slot.
Refer to DLK-95, "Component Function Check".

Is the inspection result normal?

YES >> GO TO 5.
NO >> Repair or replace the malfunctioning parts.

5. CHECK DOOR SWITCH

Check door switch.
Refer to DLK-62, "Component Function Check".

Is the inspection result normal?

YES >> GO TO 6.
NO >> Repair or replace the malfunctioning parts.

6. CONFIRM THE OPERATION

Confirm the operation again.

Is the result normal?

YES >> Check intermittent incident. Refer to GI-43, "Intermittent Incident".
NO >> GO TO 1.

TRUNK LID DOES NOT OPEN WITH TRUNK LID OPENER SWITCH

Description

INFOID:0000000008160670

NOTE:
Check trunk lid opener switch operation in the trunk lid open condition. Refer to DLK-43, "System Description".

Diagnosis Procedure

INFOID:0000000008160671

1. CHECK TRUNK LID OPENER SWITCH

Check trunk lid opener switch.
Refer to DLK-78, "Component Function Check".

Is the inspection result normal?

YES >> GO TO 2.
NO >> Repair or replace the malfunctioning parts.

2. CHECK TRUNK LID OPENER ACTUATOR

Check trunk lid opener actuator.
Refer to DLK-69, "Component Function Check".

Is the inspection result normal?

YES >> GO TO 3.
NO >> Repair or replace the malfunctioning parts.

3. CHECK TRUNK LID OPENER CANCEL SWITCH

Check trunk lid opener cancel switch.
Refer to DLK-82, "Component Function Check".

Is the inspection result normal?

YES >> GO TO 4.
NO >> Repair or replace the malfunctioning parts.

4. CHECK VEHICLE SPEED SIGNAL

Check unified meter A/C amp.
Refer to MWI-85, "DTC Index".

Is the inspection result normal?

YES >> GO TO 5.
NO >> Repair or replace the malfunctioning parts.

5. CONFIRM THE OPERATION

Confirm the operation again.

Is the result normal?

YES >> Check intermittent incident. Refer to GI-43, "Intermittent Incident".
NO >> GO TO 1.

TRUNK LID DOES NOT OPEN WITH INTELLIGENT KEY

Description

INFOID:0000000008160672

NOTE:
Check Intelligent Key remote operation with trunk lid open condition. Refer to DLK-28, "REMOTE KEYLESS ENTRY FUNCTION : System Description".

Diagnosis Procedure

INFOID:0000000008160673

1. CHECK TRUNK LID OPEN FUNCTION

Check trunk lid open function with trunk lid opener switch.

Does trunk lid open with trunk lid opener switch?

YES >> GO TO 2.
NO >> Refer to DLK-150, "Diagnosis Procedure".

2. CHECK “TRUNK OPEN DELAY” SETTING IN “WORK SUPPORT”

Check “TRUNK OPEN DELAY” setting in “WORK SUPPORT”.
Refer to DLK-49, "INTELLIGENT KEY : CONSULT Function (BCM - INTELLIGENT KEY)".

Is the inspection result normal?

YES >> GO TO 3.
NO >> Set “TRUNK OPEN DELAY” setting in “WORK SUPPORT”.

3. CHECK POWER POSITION

Check if ignition switch position is changing or not.

Does ignition switch position change?

YES >> GO TO 4.
NO >> Check DTC for BCM. Refer to DLK-141, "DTC Index".

4. CHECK INTELLIGENT KEY

Check Intelligent Key.
Refer to DLK-93, "Component Function Check".

Is the inspection result normal?

YES >> GO TO 5.
NO >> Repair or replace the malfunctioning parts.

5. CONFIRM THE OPERATION

Confirm the operation again.

Is the result normal?

YES >> Check intermittent incident. Refer to GI-43, "Intermittent Incident".
NO >> GO TO 1.

TRUNK LID DOES NOT OPEN WITH TRUNK LID OPENER REQUEST SWITCH

Description

INFOID:0000000008160674

NOTE:
Check trunk lid opener request switch operation in the trunk lid open condition. Refer to DLK-24, "TRUNK OPEN FUNCTION : System Description".

Diagnosis Procedure

INFOID:0000000008160675

1. CHECK TRUNK LID OPEN FUNCTION

Check trunk lid open function with Intelligent Key.

Does trunk lid open with Intelligent Key?

YES >> GO TO 2.
NO >> Refer to DLK-151, "Diagnosis Procedure".

2. CHECK TRUNK LID OPENER REQUEST SWITCH

Check trunk lid opener request switch.
Refer to DLK-80, "Component Function Check".

Is the inspection result normal?

YES >> GO TO 3.
NO >> Repair or replace the malfunctioning parts.

3. CHECK OUTSIDE KEY ANTENNA (REAR BUMPER)

Check outside key antenna (rear bumper).
Refer to DLK-88, "Component Function Check".

Is the inspection result normal?

YES >> GO TO 4.
NO >> Repair or replace the malfunctioning parts.

4. CONFIRM THE OPERATION

Confirm the operation again.

Is the result normal?

YES >> Check intermittent incident. Refer to GI-43, "Intermittent Incident".
NO >> GO TO 1.

SELECTIVE UNLOCK FUNCTION DOES NOT OPERATE

DOOR REQUEST SWITCH

DOOR REQUEST SWITCH : Description

INFOID:0000000008160676

NOTE:
Before performing the diagnosis in the following procedure, check the operation condition. Refer to DLK-19, "DOOR LOCK FUNCTION : System Description".

DOOR REQUEST SWITCH : Diagnosis Procedure

INFOID:0000000008160677

1. CHECK DOOR LOCK FUNCTION

Check door lock function by door request switch.

Does door lock/unlock with door request switch?

YES >> GO TO 2.
NO-1 >> Driver side: Refer to DLK-147, "DRIVER SIDE : Diagnosis Procedure".
NO-2 >> Passenger side: Refer to DLK-148, "PASSENGER SIDE : Diagnosis Procedure".

2. CHECK “DOOR LOCK–UNLOCK SET” SETTING IN “WORK SUPPORT”

Check “DOOR LOCK-UNLOCK SET” setting in “WORK SUPPORT”.
Refer to DLK-47, "DOOR LOCK : CONSULT Function (BCM - DOOR LOCK)".

Is the inspection result normal?

YES >> GO TO 3.
NO >> Set “DOOR LOCK-UNLOCK SET” in “WORK SUPPORT”.

3. CONFIRM THE OPERATION

Confirm the operation again.

Is the result normal?

YES >> Check intermittent incident. Refer to GI-43, "Intermittent Incident".
NO >> GO TO 1.

INTELLIGENT KEY

INTELLIGENT KEY : Description

INFOID:0000000008160678

NOTE:
Before performing the diagnosis in the following procedure, check the operation condition. Refer to DLK-28, "REMOTE KEYLESS ENTRY FUNCTION : System Description".

INTELLIGENT KEY : Diagnosis Procedure

INFOID:0000000008160679

1. CHECK DOOR LOCK FUNCTION

Check door lock function by intelligent key.

Does door lock/unlock with Intelligent Key button?

YES >> GO TO 2.
NO >> Refer to DLK-28, "REMOTE KEYLESS ENTRY FUNCTION : System Description".

2. CHECK “DOOR LOCK–UNLOCK SET” SETTING IN “WORK SUPPORT”

Check “DOOR LOCK-UNLOCK SET” setting in “WORK SUPPORT”.
Refer to DLK-47, "DOOR LOCK : CONSULT Function (BCM - DOOR LOCK)".

Is the inspection result normal?

YES >> GO TO 3.
NO >> Set “DOOR LOCK-UNLOCK SET” of “WORK SUPPORT”.

3. CONFIRM THE OPERATION

Confirm the operation again.

Is the result normal?

YES >> Check intermittent incident. Refer to GI-43, "Intermittent Incident".

NO >> GO TO 1.

DOOR KEY CYLINDER

DOOR KEY CYLINDER : Description

INFOID:0000000008160680

NOTE:
Before performing the diagnosis in the following procedure, check the operation condition. Refer to DLK-11, "System Description".

DOOR KEY CYLINDER : Diagnosis Procedure

INFOID:0000000008160681

1. CHECK DOOR LOCK FUNCTION

Check door lock function by door key cylinder.

Does door lock/unlock with door key cylinder?

YES >> GO TO 2.
NO >> Refer to DLK-146, "Diagnosis Procedure".

2. CHECK “DOOR LOCK–UNLOCK SET” SETTING IN “WORK SUPPORT”

Check “DOOR LOCK-UNLOCK SET” setting in “WORK SUPPORT”.
Refer to DLK-47, "DOOR LOCK : CONSULT Function (BCM - DOOR LOCK)".

Is the inspection result normal?

YES >> GO TO 3.
NO >> Set “DOOR LOCK-UNLOCK SET” of “WORK SUPPORT”.

3. CONFIRM THE OPERATION

Confirm the operation again.

Is the result normal?

YES >> Check intermittent incident. Refer to GI-43, "Intermittent Incident".
NO >> GO TO 1.

VEHICLE SPEED SENSING AUTO LOCK OPERATION DOES NOT OPERATE

Description

INFOID:0000000008160682

NOTE:
Before performing the diagnosis in the following procedure, check the operation condition. Refer to DLK-11, "System Description".

Diagnosis Procedure

INFOID:0000000008160683

1. CHECK POWER DOOR LOCK OPERATION

Check power door lock operation.

Does door lock/unlock with door lock and unlock switch?

YES >> GO TO 2.
NO >> Refer to DLK-144, "ALL DOOR : Diagnosis Procedure".

2. CHECK “AUTOMATIC LOCK/UNLOCK SELECT” SETTING IN “WORK SUPPORT”

Check “AUTOMATIC LOCK/UNLOCK SELECT” in “WORK SUPPORT”.
Refer to DLK-47, "DOOR LOCK : CONSULT Function (BCM - DOOR LOCK)".

Is the inspection result normal?

YES >> GO TO 3.
NO >> Set “AUTOMATIC LOCK/UNLOCK SELECT” in “WORK SUPPORT”.

3. CHECK “AUTOMATIC DOOR LOCK SELECT” SETTING IN “WORK SUPPORT”

Check “AUTOMATIC DOOR LOCK SELECT” in “WORK SUPPORT”.
Refer to DLK-47, "DOOR LOCK : CONSULT Function (BCM - DOOR LOCK)".

Is the inspection result normal?

YES >> GO TO 4.
NO >> Set “AUTOMATIC DOOR LOCK SELECT” in “WORK SUPPORT”.

4. CHECK VEHICLE SPEED SIGNAL

Check unified meter A/C amp.
Refer to MWI-85, "DTC Index".

Is the inspection result normal?

YES >> GO TO 5.
NO >> Repair or replace the malfunctioning parts.

5. CONFIRM THE OPERATION

Confirm the operation again.

Is the result normal?

YES >> Check intermittent incident. Refer to GI-43, "Intermittent Incident".
NO >> GO TO 1.

IGN OFF INTERLOCK DOOR UNLOCK FUNCTION DOES NOT OPERATE

Description

INFOID:0000000008160684

NOTE:
Before performing the diagnosis in the following procedure, check the operation condition. Refer to DLK-11, "System Description".

Diagnosis Procedure

INFOID:0000000008160685

1. CHECK POWER DOOR LOCK OPERATION

Check power door lock operation.

Does door lock/unlock with door lock and unlock switch?

YES >> GO TO 2.
NO >> Refer to DLK-144, "ALL DOOR : Diagnosis Procedure".

2. CHECK “AUTOMATIC LOCK/UNLOCK SELECT” SETTING IN “WORK SUPPORT”

Check “AUTOMATIC LOCK/UNLOCK SELECT” in “WORK SUPPORT”.
Refer to DLK-47, "DOOR LOCK : CONSULT Function (BCM - DOOR LOCK)".

Is the inspection result normal?

YES >> GO TO 3.
NO >> Set “AUTOMATIC LOCK/UNLOCK SELECT” in “WORK SUPPORT”.

3. CHECK “AUTOMATIC DOOR UNLOCK SELECT” SETTING IN “WORK SUPPORT”

Check “AUTOMATIC DOOR UNLOCK SELECT” in “WORK SUPPORT”.
Refer to DLK-47, "DOOR LOCK : CONSULT Function (BCM - DOOR LOCK)".

Is the inspection result normal?

YES >> GO TO 4.
NO >> Set “AUTOMATIC DOOR UNLOCK SELECT” in “WORK SUPPORT”.

4. CHECK BCM

Check BCM for DTC.
Refer to DLK-141, "DTC Index".

Is the inspection result normal?

YES >> GO TO 5.
NO >> Repair or replace the malfunctioning parts.

5. CONFIRM THE OPERATION

Confirm the operation again.

Is the result normal?

YES >> Check intermittent incident. Refer to GI-43, "Intermittent Incident".
NO >> GO TO 1.

P RANGE INTERLOCK DOOR LOCK/UNLOCK FUNCTION DOES NOT OPERATE

Description

INFOID:0000000008160686

NOTE:
Before performing the diagnosis in the following procedure, check the operation condition. Refer to DLK-11, "System Description".

Diagnosis Procedure

INFOID:0000000008160687

1. CHECK POWER DOOR LOCK OPERATION

Check power door lock operation.

Does door lock/unlock with door lock and unlock switch?

YES >> GO TO 2.
NO >> Refer to DLK-144, "ALL DOOR : Diagnosis Procedure".

2. CHECK “AUTOMATIC LOCK/UNLOCK SELECT” SETTING IN “WORK SUPPORT”

Check “AUTOMATIC LOCK/UNLOCK SELECT” in “WORK SUPPORT”.
Refer to DLK-47, "DOOR LOCK : CONSULT Function (BCM - DOOR LOCK)".

Is the inspection result normal?

YES >> GO TO 3.
NO >> Set “AUTOMATIC LOCK/UNLOCK SELECT” in “WORK SUPPORT”.

3. CHECK “AUTOMATIC DOOR LOCK SELECT” SETTING IN “WORK SUPPORT”

Check “AUTOMATIC DOOR LOCK SELECT” in “WORK SUPPORT”.
Refer to DLK-47, "DOOR LOCK : CONSULT Function (BCM - DOOR LOCK)".

Is the inspection result normal?

YES >> GO TO 4.
NO >> Set “AUTOMATIC DOOR LOCK SELECT” in “WORK SUPPORT”.

4. CHECK “AUTOMATIC DOOR UNLOCK SELECT” SETTING IN “WORK SUPPORT”

Check “AUTOMATIC DOOR UNLOCK SELECT” in “WORK SUPPORT”.
Refer to DLK-47, "DOOR LOCK : CONSULT Function (BCM - DOOR LOCK)".

Is the inspection result normal?

YES >> GO TO 5.
NO >> Set “AUTOMATIC DOOR UNLOCK SELECT” in “WORK SUPPORT”.

5. CHECK TCM

Check TCM for DTC.
Refer to TM-245, "DTC Index".

Is the inspection result normal?

YES >> GO TO 6.
NO >> Repair or replace the malfunctioning parts.

6. CONFIRM THE OPERATION

Confirm the operation again.

Is the result normal?

YES >> Check intermittent incident. Refer to GI-43, "Intermittent Incident".
NO >> GO TO 1.

AUTO DOOR LOCK OPERATION DOES NOT OPERATE

Description

INFOID:0000000008160688

NOTE:
Before performing the diagnosis in the following procedure, check the operation condition. Refer to DLK-11, "System Description".

Diagnosis Procedure

INFOID:0000000008160689

1. CHECK “AUTO LOCK SET” SETTING IN “WORK SUPPORT”

Check “AUTO LOCK SET” setting in “WORK SUPPORT”.
Refer to DLK-49, "INTELLIGENT KEY : CONSULT Function (BCM - INTELLIGENT KEY)".

Is the inspection result normal?

YES >> GO TO 2.
NO >> Set “AUTO LOCK SET” setting in “WORK SUPPORT”.

2. CONFIRM THE OPERATION

Confirm the operation again.

Is the result normal?

YES >> Check intermittent incident. Refer to GI-43, "Intermittent Incident".
NO >> GO TO 1.

FUEL LID LOCK ACTUATOR DOES NOT OPERATE

Description

INFOID:0000000008160690

NOTE:
Before performing the diagnosis in the following procedure, check the operation condition. Refer to DLK-11, "System Description".

Diagnosis Procedure

INFOID:0000000008160691

1. CHECK FUEL LID OPENER ACTUATOR

Check fuel lid opener actuator.
Refer to DLK-68, "Component Function Check".

Is the inspection result normal?

YES >> GO TO 2.
NO >> Repair or replace the malfunctioning parts.

2. CONFIRM THE OPERATION

Confirm the operation again.

Is the result normal?

YES >> Check intermittent incident. Refer to GI-43, "Intermittent Incident".
NO >> GO TO 1.

PANIC ALARM FUNCTION DOES NOT OPERATE

Description

INFOID:0000000008160692

NOTE:
Before performing the diagnosis in the following procedure, check the operation condition. Refer to DLK-28, "REMOTE KEYLESS ENTRY FUNCTION : System Description".

Diagnosis Procedure

INFOID:0000000008160693

1. CHECK REMOTE KEYLESS ENTRY FUNCTION

Check remote keyless entry function.

Does door lock/unlock with Intelligent Key button?

YES >> GO TO 2.
NO >> Refer to DLK-149, "Diagnosis Procedure".

2. CHECK VEHICLE SECURITY ALARM OPERATION

Check vehicle security alarm operation.

Does alarm (headlamp and horn) active?

YES >> GO TO 3.
NO >> Refer to SEC-161, "Diagnosis Procedure".

3. CHECK “PANIC ALARM SET” SETTING IN “WORK SUPPORT”

Check “PANIC ALARM SET” setting in “WORK SUPPORT”.
Refer to DLK-49, "INTELLIGENT KEY : CONSULT Function (BCM - INTELLIGENT KEY)".

Is the inspection result normal?

YES >> GO TO 4.
NO >> Set “PANIC ALARM SET” setting in “WORK SUPPORT”.

4. CONFIRM THE OPERATION

Confirm the operation again.

Is the result normal?

YES >> Check intermittent incident. Refer to GI-43, "Intermittent Incident".
NO >> GO TO 1.

HAZARD AND HORN REMINDER DOES NOT OPERATE

Description

INFOID:0000000008160694

NOTE:
Before performing the diagnosis, check the operation condition. Refer to DLK-28, "REMOTE KEYLESS ENTRY FUNCTION : System Description".

Diagnosis Procedure

INFOID:0000000008160695

1. CHECK “HAZARD ANSWER BACK” SETTING IN “WORK SUPPORT”

Check “HAZARD ANSWER BACK” setting in “WORK SUPPORT”.
Refer to DLK-49, "INTELLIGENT KEY : CONSULT Function (BCM - INTELLIGENT KEY)".

Is the inspection result normal?

YES >> GO TO 2.
NO >> Set “HAZARD ANSWER BACK” setting in “WORK SUPPORT”.

2. CHECK “HORN WITH KEYLESS LOCK” SETTING IN “WORK SUPPORT”.

Check “HORN WITH KEYLESS LOCK” setting in “WORK SUPPORT”.
Refer to DLK-49, "INTELLIGENT KEY : CONSULT Function (BCM - INTELLIGENT KEY)".

Is the inspection result normal?

YES >> GO TO 3.
NO >> Set “HORN WITH KEYLESS LOCK” setting in “WORK SUPPORT”.

3. CHECK POWER POSITION

Check if ignition switch position is changing or not.

Does ignition switch position change?

YES >> GO TO 4.
NO >> Check BCM for DTC. Refer to DLK-141, "DTC Index".

4. CHECK HAZARD FUNCTION

Check hazard function.
Refer to DLK-104, "Component Function Check".

Is the inspection result normal?

YES >> GO TO 5.
NO >> Repair or replace the malfunctioning parts.

5. CHECK HORN FUNCTION

Check horn function.
Refer to DLK-99, "Component Function Check".

Is the inspection result normal?

YES >> GO TO 6.
NO >> Repair or replace the malfunctioning parts.

6. CONFIRM THE OPERATION

Confirm the operation again.

Is the result normal?

YES >> Check intermittent incident. Refer to GI-43, "Intermittent Incident".
NO >> GO TO 1.

HAZARD AND BUZZER REMINDER DOES NOT OPERATE

Description

INFOID:0000000008160696

NOTE:
Before performing the diagnosis, check the operation condition. Refer to DLK-28, "REMOTE KEYLESS ENTRY FUNCTION : System Description".

Diagnosis Procedure

INFOID:0000000008160697

1. CHECK “HAZARD ANSWER BACK” SETTING IN “WORK SUPPORT”

Check “HAZARD ANSWER BACK” setting in “WORK SUPPORT”.
Refer to DLK-49, "INTELLIGENT KEY : CONSULT Function (BCM - INTELLIGENT KEY)".

Is the inspection result normal?

YES >> GO TO 2.
NO >> Set “HAZARD ANSWER BACK” in “WORK SUPPORT”.

2. CHECK “ANS BACK I-KEY LOCK” SETTING IN “WORK SUPPORT”

Check “ANS BACK I-KEY LOCK” setting in “WORK SUPPORT”.
Refer to DLK-49, "INTELLIGENT KEY : CONSULT Function (BCM - INTELLIGENT KEY)".

Is the inspection result normal?

YES >> GO TO 3.
NO >> Set “ANS BACK I-KEY LOCK” in “WORK SUPPORT”.

3. CHECK “ANS BACK I-KEY UNLOCK” SETTING IN “WORK SUPPORT”

Check “ANS BACK I-KEY UNLOCK” setting in “WORK SUPPORT”.
Refer to DLK-49, "INTELLIGENT KEY : CONSULT Function (BCM - INTELLIGENT KEY)".

Is the inspection result normal?

YES >> GO TO 4.
NO >> Set “ANS BACK I-KEY UNLOCK” in “WORK SUPPORT”.

4. CHECK POWER POSITION

Check if ignition switch position is changing or not.

Does ignition switch position change?

YES >> GO TO 5.
NO >> Check BCM for DTC. Refer to DLK-141, "DTC Index".

5. CHECK HAZARD FUNCTION

Check hazard function.
Refer to DLK-104, "Component Function Check".

Is the inspection result normal?

YES >> GO TO 6.
NO >> Repair or replace the malfunctioning parts.

6. CHECK INTELLIGENT KEY WARNING BUZZER

Check Intelligent Key warning buzzer.
Refer to DLK-91, "Component Function Check".

Is the inspection result normal?

YES >> GO TO 7.
NO >> Repair or replace the malfunctioning parts.

7. CONFIRM THE OPERATION

Confirm the operation again.

Is the result normal?

YES >> Check intermittent incident. Refer to GI-43, "Intermittent Incident".
NO >> GO TO 1.

KEY REMINDER FUNCTION DOES NOT OPERATE

INTELLIGENT KEY SYSTEM

INTELLIGENT KEY SYSTEM : Description

INFOID:0000000008160698

NOTE:
Before performing the diagnosis, check operation condition. Refer to DLK-34, "KEY REMINDER FUNCTION : System Description".

INTELLIGENT KEY SYSTEM : Diagnosis Procedure

INFOID:0000000008160699

1. CHECK “ANTI KEY LOCK IN FUNCTI” SETTING IN “WORK SUPPORT”

Check “ANTI KEY LOCK IN FUNCTI” setting in “WORK SUPPORT”.
Refer to DLK-49, "INTELLIGENT KEY : CONSULT Function (BCM - INTELLIGENT KEY)".

Is the inspection result normal?

YES >> GO TO 2.
NO >> Set “ANTI KEY LOCK IN FUNCTI” setting in “WORK SUPPORT”.

2. CHECK DOOR SWITCH

Check door switch.
Refer to DLK-62, "Component Function Check".

Is the inspection result normal?

YES >> GO TO 3.
NO >> Repair or replace the malfunctioning parts.

3. CHECK TRUNK ROOM LAMP SWITCH

Check trunk room lamp switch.
Refer to DLK-71, "Component Function Check".

Is the inspection result normal?

YES >> GO TO 4.
NO >> Repair or replace the malfunctioning parts.

4. CHECK INSIDE KEY ANTENNA

Check inside key antenna.
- Instrument center: Refer to DLK-55, "DTC Logic".
- Console: Refer to DLK-57, "DTC Logic".
- Trunk room: Refer to DLK-59, "DTC Logic".

Is the inspection result normal?

YES >> GO TO 5.
NO >> Repair or replace the malfunctioning parts.

5. CHECK UNLOCK SENSOR

Check unlock sensor.
Refer to DLK-86, "Component Function Check".

Is the inspection result normal?

YES >> GO TO 6.
NO >> Repair or replace the malfunctioning parts.

6. CONFIRM THE OPERATION

Confirm the operation again.

Is the result normal?

YES >> Check intermittent incident. Refer to GI-43, "Intermittent Incident".
NO >> GO TO 1.

POWER DOOR LOCK SYSTEM

POWER DOOR LOCK SYSTEM : Description

INFOID:0000000008160700

NOTE:
Before performing the diagnosis, check operation condition. Refer to DLK-11, "System Description".

POWER DOOR LOCK SYSTEM : Diagnosis Procedure

INFOID:0000000008160701

1.CHECK KEY SLOT

Check key slot.
Refer to DLK-95, "Component Function Check".

Is the inspection result normal?

YES >> GO TO 2.
NO >> Repair or replace the malfunctioning parts.

2.CHECK DOOR SWITCH

Check door switch.
Refer to DLK-62, "Component Function Check".

Is the inspection result normal?

YES >> GO TO 3.
NO >> Repair or replace the malfunctioning parts.

3.CONFIRM THE OPERATION

Confirm the operation again.

Is the result normal?

YES >> Check intermittent incident. Refer to GI-43, "Intermittent Incident".
NO >> GO TO 1.

KEY WARNING DOES NOT OPERATE

Description

INFOID:0000000008160702

NOTE:
- Warning functions operating condition is extremely complicated. During operation confirmation reconfirm the list above twice in order to check for normal operation. Refer to DLK-36, "WARNING FUNCTION : System Description".
- Door lock function is normal.

Diagnosis Procedure

INFOID:0000000008160703

1. CHECK BUZZER (COMBINATION METER)

Check buzzer (combination meter).
Refer to DLK-102, "Component Function Check".

Is the inspection result normal?

YES >> GO TO 2.
NO >> Repair or replace the malfunctioning parts.

2. CHECK DOOR SWITCH

Check door switch (driver side).
Refer to DLK-62, "Component Function Check".

Is the inspection result normal?

YES >> GO TO 3.
NO >> Repair or replace the malfunctioning parts.

3. CHECK KEY SLOT

Check key slot.
Refer to DLK-95, "Component Function Check".

Is the inspection result normal?

YES >> GO TO 4.
NO >> Repair or replace the malfunctioning parts.

4. CHECK COMBINATION METER DISPLAY FUNCTION

Check combination meter display function.
Refer to DLK-101, "Component Function Check".

Is the inspection result normal?

YES >> GO TO 5.
NO >> Repair or replace the malfunctioning parts.

5. CHECK KEY SLOT INDICATOR

Check key slot indicator.
Refer to DLK-97, "Component Function Check".

Is the inspection result normal?

YES >> GO TO 6.
NO >> Repair or replace the malfunctioning parts.

6. CONFIRM THE OPERATION

Confirm the operation again.

Is the result normal?

YES >> Check intermittent incident. Refer to GI-43, "Intermittent Incident".
NO >> GO TO 1.

OFF POSITION WARNING DOES NOT OPERATE

Description

INFOID:0000000008160704

NOTE:
- Warning functions operating condition is extremely complicated. During operation confirmation reconfirm the list above twice in order to check for normal operation. Refer to DLK-36, "WARNING FUNCTION : System Description".
- Door lock function is normal.

Diagnosis Procedure

INFOID:0000000008160705

1. CHECK POWER POSITION

Check if ignition switch position is changing or not.

Does ignition switch position change?

YES >> GO TO 2.
NO >> Check BCM for DTC. Refer to DLK-141, "DTC Index".

2. CHECK BUZZER (COMBINATION METER)

Check buzzer (combination meter).
Refer to DLK-102, "Component Function Check".

Is the inspection result normal?

YES >> GO TO 3.
NO >> Repair or replace the malfunctioning parts.

3. CHECK INTELLIGENT KEY WARNING BUZZER

Check Intelligent Key warning buzzer.
Refer to DLK-91, "Component Function Check".

Is the inspection result normal?

YES >> GO TO 4.
NO >> Repair or replace the malfunctioning parts.

4. CHECK DOOR SWITCH

Check door switch (driver side).
Refer to DLK-62, "Component Function Check".

Is the inspection result normal?

YES >> GO TO 5.
NO >> Repair or replace the malfunctioning parts.

5. CONFIRM THE OPERATION

Confirm the operation again.

Is the result normal?

YES >> Check intermittent incident. Refer to GI-43, "Intermittent Incident".
NO >> GO TO 1.

P POSITION WARNING DOES NOT OPERATE

Description

INFOID:0000000008160706

NOTE:
- Warning functions operating condition is extremely complicated. During operation confirmation reconfirm the list above twice in order to check for normal operation. Refer to DLK-36, "WARNING FUNCTION : System Description".
- Door lock function is normal.

Diagnosis Procedure

INFOID:0000000008160707

1. CHECK POWER POSITION

Check if ignition switch position is changing or not.

Does ignition switch position change?

YES >> GO TO 2.
NO >> Check BCM for DTC. Refer to DLK-141, "DTC Index".

2. CHECK DETENTION SWITCH

Check BCM for DTC.
Refer to DLK-141, "DTC Index".

Is the inspection result normal?

YES >> GO TO 3.
NO >> Repair or replace the malfunctioning parts.

3. CHECK INTELLIGENT KEY WARNING BUZZER

Check Intelligent Key warning buzzer.
Refer to DLK-91, "Component Function Check".

Is the inspection result normal?

YES >> GO TO 4.
NO >> Repair or replace the malfunctioning parts.

4. CHECK BUZZER (COMBINATION METER)

Check buzzer (combination meter).
Refer to DLK-102, "Component Function Check".

Is the inspection result normal?

YES >> GO TO 5.
NO >> Repair or replace the malfunctioning parts.

5. CHECK DOOR SWITCH

Check door switch (driver side).
Refer to DLK-62, "Component Function Check".

Is the inspection result normal?

YES >> GO TO 6.
NO >> Repair or replace the malfunctioning parts.

6. CHECK INSIDE KEY ANTENNA

Check inside key antenna.
- Instrument center: Refer to DLK-55, "DTC Logic".
- Console: Refer to DLK-57, "DTC Logic".
- Trunk room: Refer to DLK-59, "DTC Logic".

Is the inspection result normal?

YES >> GO TO 7.
NO >> Repair or replace the malfunctioning parts.

7. CHECK COMBINATION METER DISPLAY FUNCTION

Check combination meter display function.
Refer to DLK-101, "Component Function Check".

Is the inspection result normal?

YES >> GO TO 8.
NO >> Repair or replace the malfunctioning parts.

8. CONFIRM THE OPERATION

Confirm the operation again.

Is the result normal?

YES >> Check intermittent incident. Refer to GI-43, "Intermittent Incident".
NO >> GO TO 1.

ACC WARNING DOES NOT OPERATE

Description

INFOID:0000000008160708

NOTE:
- Warning functions operating condition is extremely complicated. During operation confirmation reconfirm the list above twice in order to check for normal operation. Refer to DLK-36, "WARNING FUNCTION : System Description".
- Door lock function is normal.

Diagnosis Procedure

INFOID:0000000008160709

1. CHECK POWER POSITION

Check if ignition switch position is changing or not.

Does ignition switch position change?

YES >> GO TO 2.
NO >> Check BCM for DTC. Refer to DLK-141, "DTC Index".

2. CHECK BUZZER (COMBINATION METER)

Check buzzer (combination meter).
Refer to DLK-102, "Component Function Check".

Is the inspection result normal?

YES >> GO TO 3.
NO >> Repair or replace the malfunctioning parts.

3. CHECK COMBINATION METER DISPLAY FUNCTION

Check combination meter display function.
Refer to DLK-101, "Component Function Check".

Is the inspection result normal?

YES >> GO TO 4.
NO >> Repair or replace the malfunctioning parts.

4. CONFIRM THE OPERATION

Confirm the operation again.

Is the result normal?

YES >> Check intermittent incident. Refer to GI-43, "Intermittent Incident".
NO >> GO TO 1.

TAKE AWAY WARNING DOES NOT OPERATE

Description

INFOID:0000000008160710

When door opens, take away warning does not operate.

NOTE:

- Warning functions operating condition is extremely complicated. During operation confirmation reconfirm the list above twice in order to check for normal operation. Refer to DLK-36, "WARNING FUNCTION : System Description".
- Door lock function is normal.

Diagnosis Procedure

INFOID:0000000008160711

1. CHECK POWER POSITION

Check if ignition switch position is changing or not.

Does ignition switch position change?

YES >> GO TO 2.
NO >> Check BCM for DTC. Refer to DLK-141, "DTC Index".

2. CHECK DOOR SWITCH

Check door switch.
Refer to DLK-62, "Component Function Check".

Is the inspection result normal?

YES >> GO TO 3.
NO >> Repair or replace the malfunctioning parts.

3. CHECK KEY SLOT

Check key slot.
Refer to DLK-95, "Component Function Check".

Is the inspection result normal?

YES >> GO TO 4.
NO >> Repair or replace the malfunctioning parts.

4. CHECK INSIDE KEY ANTENNA

Check inside key antenna.

- Instrument center: Refer to DLK-55, "DTC Logic".
- Console: Refer to DLK-57, "DTC Logic".
- Trunk room: Refer to DLK-59, "DTC Logic".

Is the inspection result normal?

YES >> GO TO 5.
NO >> Repair or replace the malfunctioning parts.

5. CHECK BUZZER (COMBINATION METER)

Check buzzer (combination meter).
Refer to DLK-102, "Component Function Check".

Is the inspection result normal?

YES >> GO TO 6.
NO >> Repair or replace the malfunctioning parts.

6. CHECK COMBINATION METER DISPLAY FUNCTION

Check combination meter display function.
Refer to DLK-101, "Component Function Check".

Is the inspection result normal?

YES >> GO TO 7.
NO >> Repair or replace the malfunctioning parts.

7. CHECK INTELLIGENT KEY WARNING BUZZER

Check Intelligent Key warning buzzer.

Refer to DLK-91, "Component Function Check".

Is the inspection result normal?

YES >> GO TO 8.
NO >> Repair or replace the malfunctioning parts.

8. CHECK KEY SLOT INDICATOR

Check key slot indicator.
Refer to DLK-97, "Component Function Check".

Is the inspection result normal?

YES >> GO TO 9.
NO >> Repair or replace the malfunctioning parts.

9. CONFIRM THE OPERATION

Confirm the operation again.

Is the result normal?

YES >> Check intermittent incident. Refer to GI-43, "Intermittent Incident".
NO >> GO TO 1.

INTELLIGENT KEY LOW BATTERY WARNING DOES NOT OPERATE

Description

INFOID:0000000008160712

NOTE:
Warning functions operating condition is extremely complicated. During operation confirmation reconfirm the list above twice in order to check for normal operation. Refer to DLK-36, "WARNING FUNCTION : System Description".

Diagnosis Procedure

INFOID:0000000008160713

1. CHECK “LO- BATT OF KEY FOB WARN” SETTING IN “WORK SUPPORT”

Check “LO- BATT OF KEY FOB WARN” setting in “WORK SUPPORT”.
Refer to DLK-49, "INTELLIGENT KEY : CONSULT Function (BCM - INTELLIGENT KEY)".

Is the inspection result normal?

YES >> GO TO 2.
NO >> Set “LO- BATT OF KEY FOB WARN” setting in “WORK SUPPORT”.

2. CHECK INTELLIGENT KEY

Check Intelligent key.
Refer to DLK-93, "Component Function Check".

Is the inspection result normal?

YES >> GO TO 3.
NO >> Repair or replace the malfunctioning parts.

3. CHECK COMBINATION METER DISPLAY FUNCTION

Check combination meter display function.
Refer to DLK-101, "Component Function Check".

Is the inspection result normal?

YES >> GO TO 4.
NO >> Repair or replace the malfunctioning parts.

4. CHECK INSIDE KEY ANTENNA

Check inside key antenna.
- Instrument center: Refer to DLK-55, "DTC Logic".
- Console: Refer to DLK-57, "DTC Logic".
- Trunk room: Refer to DLK-59, "DTC Logic".

Is the inspection result normal?

YES >> GO TO 5.
NO >> Repair or replace the malfunctioning parts.

5. CONFIRM THE OPERATION

Confirm the operation again.

Is the result normal?

YES >> Check intermittent incident. Refer to GI-43, "Intermittent Incident".
NO >> GO TO 1.

DOOR LOCK OPERATION WARNING DOES NOT OPERATE

Description

INFOID:0000000008160714

Door lock operation warning does not activate using door request switch.

NOTE:

Warning functions operating condition is extremely complicated. During operation confirmation reconfirm the list above twice in order to check for normal operation. Refer to DLK-36, "WARNING FUNCTION : System Description".

Diagnosis Procedure

INFOID:0000000008160715

1. CHECK DOOR LOCK FUNCTION

Check door lock function.

Does door lock/unlock using door request switch?

YES >> GO TO 2.
NO-1 >> Driver side: Refer to DLK-147, "DRIVER SIDE : Diagnosis Procedure".
NO-2 >> Passenger side: Refer to DLK-148, "PASSENGER SIDE : Diagnosis Procedure".

2. CHECK INTELLIGENT KEY WARNING BUZZER

Check Intelligent Key warning buzzer.
Refer to DLK-91, "Component Function Check".

Is the inspection result normal?

YES >> GO TO 3.
NO >> Repair or replace the malfunctioning parts.

3. CONFIRM THE OPERATION

Confirm the operation again.

Is the result normal?

YES >> Check intermittent incident. Refer to GI-43, "Intermittent Incident".
NO >> GO TO 1.

KEY ID WARNING DOES NOT OPERATE

Description

INFOID:0000000008160716

NOTE:
Warning functions operating condition is extremely complicated. During operation confirmation reconfirm the list above twice in order to check for normal operation. Refer to DLK-36, "WARNING FUNCTION : System Description".

Diagnosis Procedure

INFOID:0000000008160717

1. CHECK INTELLIGENT KEY

Check Intelligent Key.
Refer to DLK-93, "Component Function Check".

Is the inspection result normal?

YES >> GO TO 2.
NO >> Repair or replace the malfunctioning parts.

2. CHECK COMBINATION METER DISPLAY FUNCTION

Check combination meter display function.
Refer to DLK-101, "Component Function Check".

Is the inspection result normal?

YES >> GO TO 3.
NO >> Repair or replace the malfunctioning parts.

3. CONFIRM THE OPERATION

Confirm the operation again.

Is the result normal?

YES >> Check intermittent incident. Refer to GI-43, "Intermittent Incident".
NO >> GO TO 1.

KEY WARNING LAMP DOES NOT ILLUMINATE

Description

INFOID:0000000008160718

NOTE:
Warning functions operating condition is extremely complicated. During operation confirmation reconfirm the list above twice in order to check for normal operation. Refer to DLK-36, "WARNING FUNCTION : System Description".

Diagnosis Procedure

INFOID:0000000008160719

1. CHECK KEY WARNING LAMP

Check key warning lamp.
Refer to DLK-103, "Component Function Check".

Is the inspection result normal?

YES >> GO TO 2.
NO >> Repair or replace the malfunctioning parts.

2. CONFIRM THE OPERATION

Confirm the operation again.

Is the result normal?

YES >> Check intermittent incident. Refer to GI-43, "Intermittent Incident".
NO >> GO TO 1.

INTEGRATED HOMELINK TRANSMITTER DOES NOT OPERATE

Diagnosis Procedure

INFOID:0000000008160720

1. CHECK INTEGRATED HOMELINK TRANSMITTER

Check integrated home link transmitter.
Refer to DLK-105, "Component Function Check".

Is the inspection result normal?

YES >> GO TO 2.
NO >> Repair or replace the malfunctioning parts.

2. CONFIRM THE OPERATION

Confirm the operation again.

Is the result normal?

YES >> Check intermittent incident. Refer to GI-43, "Intermittent Incident".
NO >> GO TO 1.

SQUEAK AND RATTLE TROUBLE DIAGNOSES

Work Flow

INFOID:0000000008160721

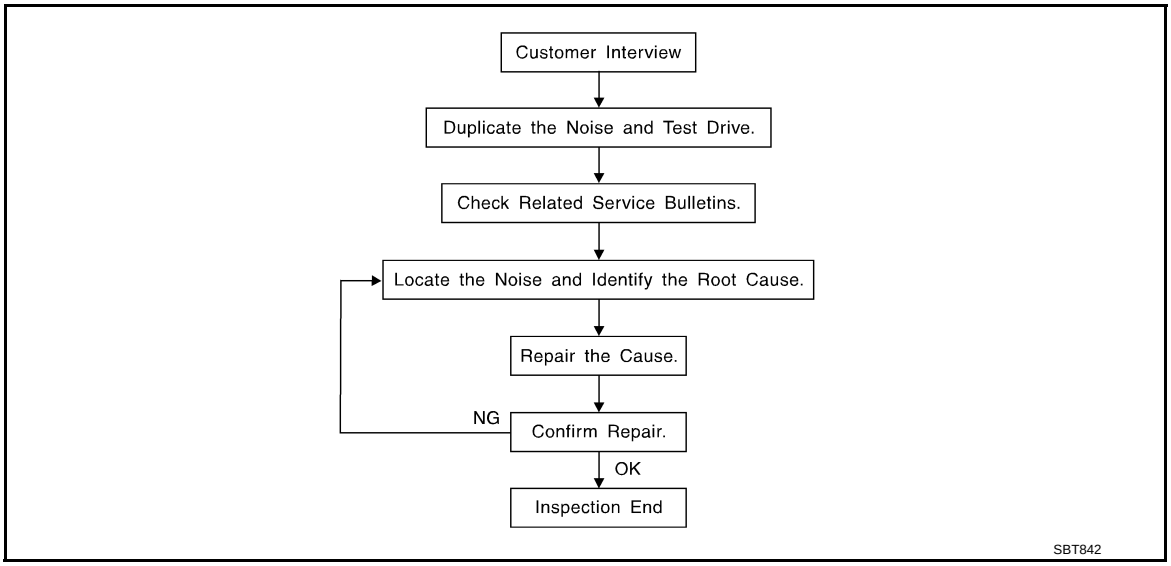

CUSTOMER INTERVIEW

Interview the customer if possible, to determine the conditions that exist when the noise occurs. Use the Diagnostic Worksheet during the interview to document the facts and conditions when the noise occurs and any of customer's comments; refer to DLK-181, "Diagnostic Worksheet". This information is necessary to duplicate the conditions that exist when the noise occurs.

- The customer may not be able to provide a detailed description or the location of the noise. Attempt to obtain all the facts and conditions that exist when the noise occurs (or does not occur).
- If there is more than one noise in the vehicle, perform a diagnosis and repair the noise that the customer is concerned about. This can be accomplished by performing a cruise test on the vehicle with the customer.
- After identifying the type of noise, isolate the noise in terms of its characteristics. The noise characteristics are provided so the customer, service adviser and technician are all speaking the same language when defining the noise.
- Squeak – (Like tennis shoes on a clean floor)
  Squeak characteristics include the light contact/fast movement/brought on by road conditions/hard surfaces = higher pitch noise/softer surfaces = lower pitch noises/edge to surface = chirping
- Creak – (Like walking on an old wooden floor)
  Creak characteristics include firm contact/slow movement/twisting with a rotational movement/pitch dependent on materials/often brought on by activity.
- Rattle – (Like shaking a baby rattle)
  Rattle characteristics include the fast repeated contact/vibration or similar movement/loose parts/missing clip or fastener/incorrect clearance.
- Knock – (Like a knock on a door)
  Knock characteristics include hollow sounding/sometimes repeating/often brought on by driver action.
- Tick – (Like a clock second hand)
  Tick characteristics include gentle contacting of light materials/loose components/can be caused by driver action or road conditions.
- Thump – (Heavy, muffled knock noise)
  Thump characteristics include softer knock/dead sound often brought on by activity.
- Buzz – (Like a bumblebee)
  Buzz characteristics include high frequency rattle/firm contact.
- Often the degree of acceptable noise level will vary depending up on the person. A noise that a technician may judge as acceptable may be very irritating to the customer.
- Weather conditions, especially humidity and temperature, may have a great effect on noise level.

DUPLICATE THE NOISE AND TEST DRIVE

If possible, drive the vehicle with the customer until the noise is duplicated. Note any additional information on the Diagnostic Worksheet regarding the conditions or location of the noise. This information can be used to duplicate the same conditions when the repair is reconfirmed.

If the noise can be duplicated easily during the test drive, to help identify the source of the noise, try to duplicate the noise with the vehicle stopped by doing one or all of the following:
1) Close a door.
2) Tap or push/pull around the area where the noise appears to be coming from.
3) Rev the engine.
4) Use a floor jack to recreate vehicle “twist”.
5) At idle, apply engine load (electrical load, half-clutch on M/T models, drive position on A/T models).
6) Raise the vehicle on a hoist and hit a tire with a rubber hammer.

- Drive the vehicle and attempt to duplicate the conditions the customer states exist when the noise occurs.
- If it is difficult to duplicate the noise, drive the vehicle slowly on an undulating or rough road to stress the vehicle body.

CHECK RELATED SERVICE BULLETINS

After verifying the customer concern or symptom, check ASIST for Technical Service Bulletins (TSBs) related to that concern or symptom.
If a TSB relates to the symptom, follow the procedure to repair the noise.

LOCATE THE NOISE AND IDENTIFY THE ROOT CAUSE

1. Narrow down the noise to a general area. To help pinpoint the source of the noise, use a listening tool (Chassis ear: J-39570, Engine ear and mechanics stethoscope).
2. Narrow down the noise to a more specific area and identify the cause of the noise by:

- Removing the components in the area that is are suspected to be the cause of the noise.
  Do not use too much force when removing clips and fasteners, otherwise clips and fastener can be broken or lost during the repair, resulting in the creation of new noise.
- Tapping or pushing/pulling the component that is are suspected to be the cause of the noise.
  Do not tap or push/pull the component with excessive force, otherwise the noise will be eliminated only temporarily.
- Feeling for a vibration by hand by touching the component(s) that is are suspected to be the cause of the noise.
- Placing a piece of paper between components that are suspected to be the cause of the noise.
- Looking for loose components and contact marks.
  Refer to DLK-179, "Inspection Procedure".

REPAIR THE CAUSE

- If the cause is a loose component, tighten the component securely.
- If the cause is insufficient clearance between components:
- Separate components by repositioning or loosening and retightening the component, if possible.
- Insulate components with a suitable insulator such as urethane pads, foam blocks, felt cloth tape or urethane tape. A Nissan Squeak and Rattle Kit (J-43980) is available through the authorized Nissan Parts Department.

CAUTION:
Never use excessive force as many components are constructed of plastic and may be damaged.
NOTE:
Always check with the Parts Department for the latest parts information.
The following materials are contained in the Nissan Squeak and Rattle Kit (J-43980). Each item can be ordered separately as needed.
URETHANE PADS [1.5 mm (0.059 in) thick]
Insulates connectors, harness, etc.
76268-9E005: 100 × 135 mm (3.94 × 5.31 in)/76884-71L01: 60 × 85 mm (2.36 × 3.35 in)/76884-71L02:15 × 25 mm (0.59 × 0.98 in)
INSULATOR (Foam blocks)
Insulates components from contact. Can be used to fill space behind a panel.
73982-9E000: 45 mm (1.77 in) thick, 50 × 50 mm (1.97 × 1.97 in)/73982-50Y00: 10 mm (0.39 in) thick, 50 × 50 mm (1.97 × 1.97 in)
INSULATOR (Light foam block)
80845-71L00: 30 mm (1.18 in) thick, 30 × 50 mm (1.18 × 1.97in)
FELT CLOTHTAPE
Used to insulate where movement does not occur. Ideal for instrument panel applications.
68370-4B000: 15 × 25 mm (0.59 × 0.98 in) pad/68239-13E00: 5 mm (0.20 in) wide tape roll
The following materials, not found in the kit, can also be used to repair squeaks and rattles.
UHMW (TEFLON) TAPE

Insulates where slight movement is present. Ideal for instrument panel applications.
SILICONE GREASE
Used in place of UHMW tape that is be visible or does not fit. Will only last a few months.
SILICONE SPRAY
Used when grease cannot be applied.
DUCT TAPE
Used to eliminate movement.

CONFIRM THE REPAIR

Confirm that the cause of a noise is repaired by test driving the vehicle. Operate the vehicle under the same conditions as when the noise originally occurred. Refer to the notes on the Diagnostic Worksheet.

Inspection Procedure

INFOID:0000000008160722

Refer to Table of Contents for specific component removal and installation information.

INSTRUMENT PANEL

Most incidents are caused by contact and movement between:

1. The cluster lid A and instrument panel
2. Acrylic lens and combination meter housing
3. Instrument panel to front pillar garnish
4. Instrument panel to windshield
5. Instrument panel mounting pins
6. Wiring harnesses behind the combination meter
7. A/C defroster duct and duct joint
   These incidents can usually be located by tapping or moving the components to duplicate the noise or by pressing on the components while driving to stop the noise. Most of these incidents can be repaired by applying felt cloth tape or silicon spray (in hard to reach areas). Urethane pads can be used to insulate wiring harness.
   CAUTION:
   Never use silicone spray to isolate a squeak or rattle. If the area is saturated with silicone, the recheck of repair becomes impossible.

CENTER CONSOLE

Components to pay attention to include:

1. Shifter assembly cover to finisher
2. A/C control unit and cluster lid C
3. Wiring harnesses behind audio and A/C control unit

The instrument panel repair and isolation procedures also apply to the center console.

DOORS

Pay attention to the following:

1. Finisher and inner panel making a slapping noise
2. Inside handle escutcheon to door finisher
3. Wiring harnesses tapping
4. Door striker out of alignment causing a popping noise on starts and stops

Tapping or moving the components or pressing on them while driving to duplicate the conditions can isolate many of these incidents. The areas can usually be insulated with felt cloth tape or insulator foam blocks from the Nissan Squeak and Rattle Kit (J-43980) to repair the noise.

TRUNK

Trunk noises are often caused by a loose jack or loose items put into the trunk by the customer.
In addition look for the following:

1. Trunk lid dumpers out of adjustment
2. Trunk lid striker out of adjustment
3. The trunk lid torsion bars knocking together
4. A loose license plate or bracket

Most of these incidents can be repaired by adjusting, securing or insulating the item(s) or component(s) causing the noise.

SUNROOF/HEADLINING

Noises in the sunroof/headlining area can often be traced to one of the following:

1. Sunroof lid, rail, linkage or seals making a rattle or light knocking noise
2. Sunvisor shaft shaking in the holder
3. Front or rear windshield touching headlining and squeaking

Again, pressing on the components to stop the noise while duplicating the conditions can isolate most of these incidents. Repairs usually consist of insulating with felt cloth tape.

SEATS

When isolating seat noise it's important to note the position the seats in and the load placed on the seat when the noise occurs. These conditions should be duplicated when verifying and isolating the cause of the noise.
Cause of seat noise include:

1. Headrest rods and holder
2. A squeak between the seat pad cushion and frame
3. The rear seatback lock and bracket

These noises can be isolated by moving or pressing on the suspected components while duplicating the conditions under which the noise occurs.Most of these incidents can be repaired by repositioning the component or applying urethane tape to the contact area.

UNDERHOOD

Some interior noise may be caused by components under the hood or on the engine wall. The noise is then transmitted into the passenger compartment.
Causes of transmitted underhood noise include:

1. Any component mounted to the engine wall
2. Components that pass through the engine wall
3. Engine wall mounts and connectors
4. Loose radiator mounting pins
5. Hood bumpers out of adjustment
6. Hood striker out of adjustment

These noises can be difficult to isolate since they cannot be reached from the interior of the vehicle. The best method is to secure, move or insulate one component at a time and test drive the vehicle. Also, engine RPM or load can be changed to isolate the noise. Repairs can usually be made by moving, adjusting, securing, or insulating the component causing the noise.

Diagnostic Worksheet

INFOID:0000000008160723

INFINITI.

SQUEAK & RATTLE DIAGNOSTIC WORKSHEET

Dear Infiniti Customer:
We are concerned about your satisfaction with your Infiniti vehicle. Repairing a squeak or rattle sometimes can be very difficult. To help us fix your Infiniti right the first time, please take a moment to note the area of the vehicle where the squeak or rattle occurs and under what conditions. You may be asked to take a test drive with a service consultant or technician to ensure we confirm the noise you are hearing.

I. WHERE DOES THE NOISE COME FROM? (circle the area of the vehicle)
The illustrations are for reference only, and may not reflect the actual configuration of your vehicle.

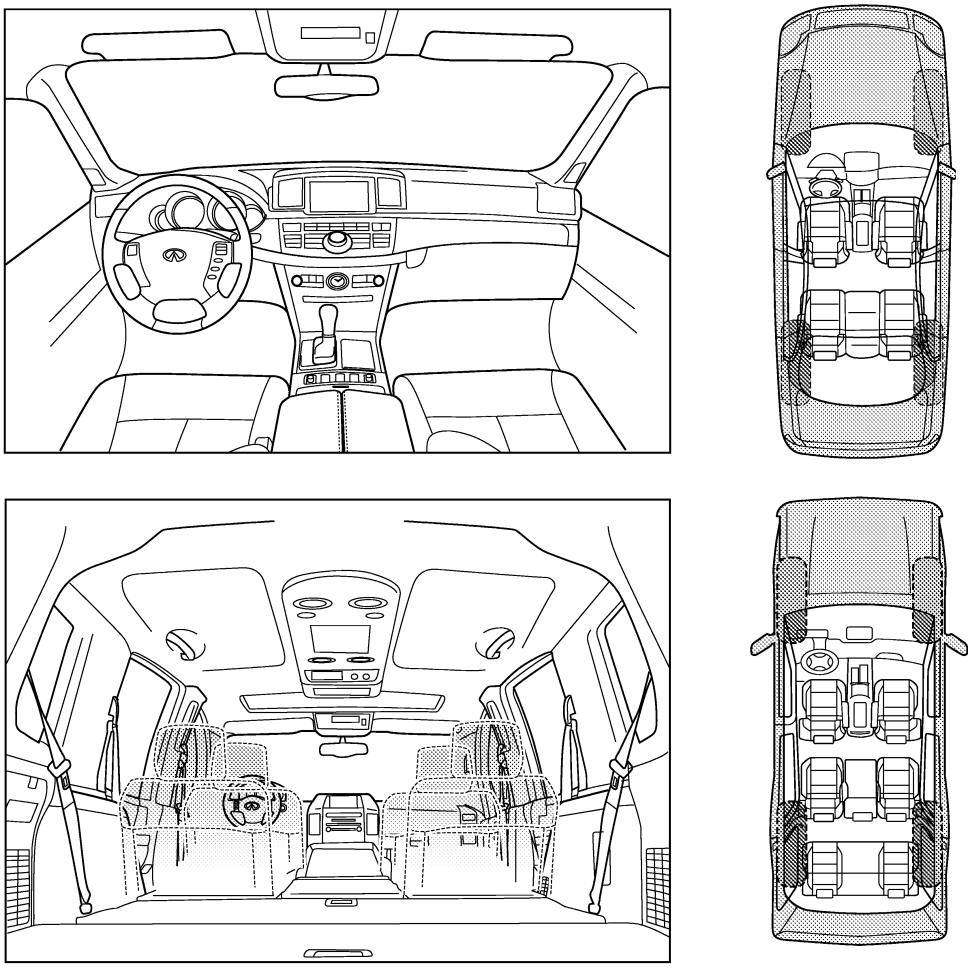

Continue to page 2 of the worksheet and briefly describe the location of the noise or rattle. In addition, please indicate the conditions which are present when the noise occurs.

PIIB8741E

SQUEAK & RATTLE DIAGNOSTIC WORKSHEET - page 2

Briefly describe the location where the noise occurs:

_____

_____

II. WHEN DOES IT OCCUR? (please check the boxes that apply)

- ☐ anytime
- ☐ 1st time in the morning
- ☐ only when it is cold outside
- ☐ only when it is hot outside
- ☐ after sitting out in the rain
- ☐ when it is raining or wet
- ☐ dry or dusty conditions
- ☐ other:

III. WHEN DRIVING:

- ☐ through driveways
- ☐ over rough roads
- ☐ over speed bumps
- ☐ only about ____ mph
- ☐ on acceleration
- ☐ coming to a stop
- ☐ on turns: left, right or either (circle)
- ☐ with passengers or cargo
- ☐ other: _____
- ☐ after driving _____ miles or _____ minutes

IV. WHAT TYPE OF NOISE

- ☐ squeak (like tennis shoes on a clean floor)
- ☐ creak (like walking on an old wooden floor)
- ☐ rattle (like shaking a baby rattle)
- ☐ knock (like a knock at the door)
- ☐ tick (like a clock second hand)
- ☐ thump (heavy, muffled knock noise)
- ☐ buzz (like a bumble bee)

TO BE COMPLETED BY DEALERSHIP PERSONNEL

Test Drive Notes:

_____

_____

_____

	YES	NO	Initials of person performing
Vehicle test driven with customer	☐	☐	_____
- Noise verified on test drive	☐	☐	_____
- Noise source located and repaired	☐	☐	_____
- Follow up test drive performed to confirm repair	☐	☐	_____

VIN: _____ Customer Name: _____

W.O.# _____ Date: _____

This form must be attached to Work Order

PIIB8742E

PRECAUTION

PRECAUTIONS

Precaution for Supplemental Restraint System (SRS) "AIR BAG" and "SEAT BELT PRE-TENSIONER"

INFOID:0000000008160724

The Supplemental Restraint System such as “AIR BAG” and “SEAT BELT PRE-TENSIONER”, used along with a front seat belt, helps to reduce the risk or severity of injury to the driver and front passenger for certain types of collision. This system includes seat belt switch inputs and dual stage front air bag modules. The SRS system uses the seat belt switches to determine the front air bag deployment, and may only deploy one front air bag, depending on the severity of a collision and whether the front occupants are belted or unbelted.
Information necessary to service the system safely is included in the “SRS AIR BAG” and “SEAT BELT” of this Service Manual.

WARNING:
Always observe the following items for preventing accidental activation.
- **To avoid rendering the SRS inoperative, which could increase the risk of personal injury or death in the event of a collision that would result in air bag inflation, all maintenance must be performed by an authorized NISSAN/INFINITI dealer.**
- **Improper maintenance, including incorrect removal and installation of the SRS, can lead to personal injury caused by unintentional activation of the system. For removal of Spiral Cable and Air Bag Module, see “SRS AIR BAG”.**
- **Never use electrical test equipment on any circuit related to the SRS unless instructed to in this Service Manual. SRS wiring harnesses can be identified by yellow and/or orange harnesses or harness connectors.**

PRECAUTIONS WHEN USING POWER TOOLS (AIR OR ELECTRIC) AND HAMMERS

WARNING:
Always observe the following items for preventing accidental activation.
- **When working near the Air Bag Diagnosis Sensor Unit or other Air Bag System sensors with the ignition ON or engine running, never use air or electric power tools or strike near the sensor(s) with a hammer. Heavy vibration could activate the sensor(s) and deploy the air bag(s), possibly causing serious injury.**
- **When using air or electric power tools or hammers, always switch the ignition OFF, disconnect the battery, and wait at least 3 minutes before performing any service.**

Precaution for Battery Service

INFOID:0000000008160725

Before disconnecting the battery, lower both the driver and passenger windows. This will prevent any interference between the window edge and the vehicle when the door is opened/closed. During normal operation, the window slightly raises and lowers automatically to prevent any window to vehicle interference. The automatic window function will not work with the battery disconnected.

Precaution for Procedure without Cowl Top Cover

INFOID:0000000008160726

When performing the procedure after removing cowl top cover, cover the lower end of windshield with urethane, etc to prevent damage to windshield.

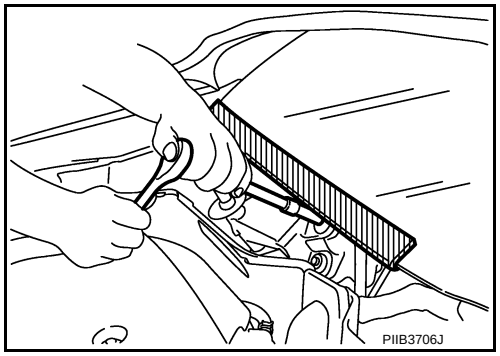

Precautions For Xenon Headlamp Service

INFOID:0000000008160727

WARNING:
Comply with the following warnings to prevent any serious accident.

- **Disconnect the battery cable (negative terminal) or the power supply fuse before installing, removing, or touching the xenon headlamp (bulb included). The xenon headlamp contains high-voltage generated parts.**
- **Never work with wet hands.**
- **Check the xenon headlamp ON-OFF status after assembling it to the vehicle. Never turn the xenon headlamp ON in other conditions. Connect the power supply to the vehicle-side connector. (Turning it ON outside the lamp case may cause fire or visual impairments.)**
- **Never touch the bulb glass immediately after turning it OFF. It is extremely hot.**

CAUTION:

Comply with the following cautions to prevent any error and malfunction.

- **Install the xenon bulb securely. (Insufficient bulb socket installation may melt the bulb, the connector, the housing, etc. by high-voltage leakage or corona discharge.)**
- **Never perform HID circuit inspection with a tester.**
- **Never touch the xenon bulb glass with hands. Never put oil and grease on it.**
- **Dispose of the used xenon bulb after packing it in thick vinyl without breaking it.**
- **Never wipe out dirt and contamination with organic solvent (thinner, gasoline, etc.).**

Work

INFOID:0000000008160728

- After removing and installing the opening/closing parts, be sure to carry out fitting adjustments to check their operational.
- Check the lubrication level, damage, and wear of each part. If necessary, grease or replace it.

PREPARATION

PREPARATION

Special Service Tools

INFOID:0000000008160729

The actual shapes of Kent-Moore tools may differ from those of special service tools illustrated here.

Tool number (Kent-Moore No.) Tool name		Description
(J-39570) Chassis ear	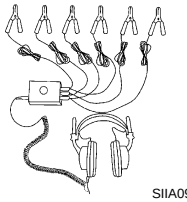 SIIA0993E	Locates the noise
(J-43980) NISSAN Squeak and Rattle Kit	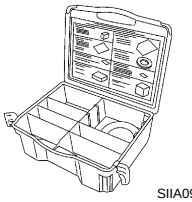 SIIA0994E	Repairs the cause of noise

Commercial Service Tools

INFOID:0000000008160730

Tool name		Description
Engine ear	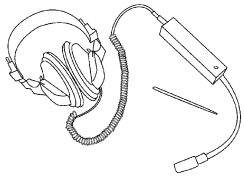 SIIA0995E	Locates the noise
Remover tool	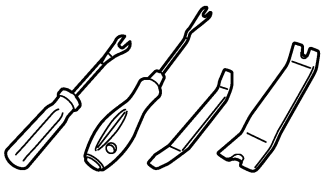 JMKIA3050ZZ	Removes clips, pawls and metal clips
Power tool	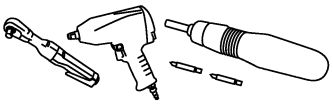 PIIB1407E	

REMOVAL AND INSTALLATION

HOOD

HOOD ASSEMBLY

HOOD ASSEMBLY : Exploded View

INFOID:0000000008160731

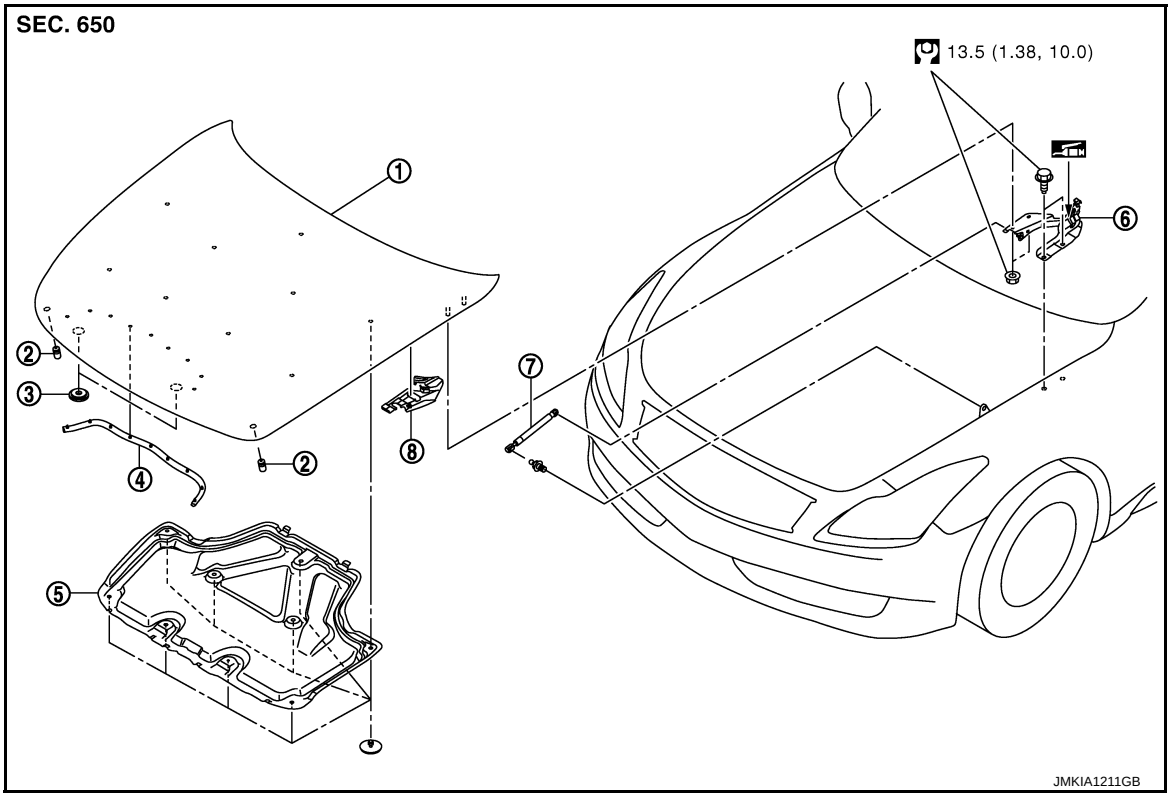

1.	Hood assembly	2.	Hood bumper rubber	3.	Seal
4.	Radiator core seal	5.	Hood insulator	6.	Hood hinge
7.	Hood stay	8.	Hood hinge cover		

Refer to GI-4, "Components" for symbols in the figure.

HOOD ASSEMBLY : Removal and Installation

INFOID:0000000008160732

CAUTION:
Operate with two workers, because of its heavy weight.

REMOVAL

1. Support the hood lock assembly with a proper material to prevent it from falling.

   WARNING:
   Body injury may occur if no supporting rod is holding the hood open when removing the hood stay.
2. Remove the hood hinge cover (LH/RH).
3. Remove the washer nozzle, washer tube. Refer to WW-49, "Removal and Installation".
4. Remove the stud balls on the hood stays at the hood side.
5. Remove the hinge mounting nuts on the hood to remove the hood assembly.

INSTALLATION

Install in the reverse order of removal.

CAUTION:

- **Before installing hood hinge, apply anticorrosive agent onto the mounting surface of the vehicle body.**
- **After installing, perform hood fitting adjustment. Refer to DLK-187, "HOOD ASSEMBLY : Adjustment".**
- **After installing, perform front washer nozzle and tube inspection and adjustment. Refer to WW-49, "Inspection and Adjustment".**

HOOD ASSEMBLY : Adjustment

INFOID:0000000008160733

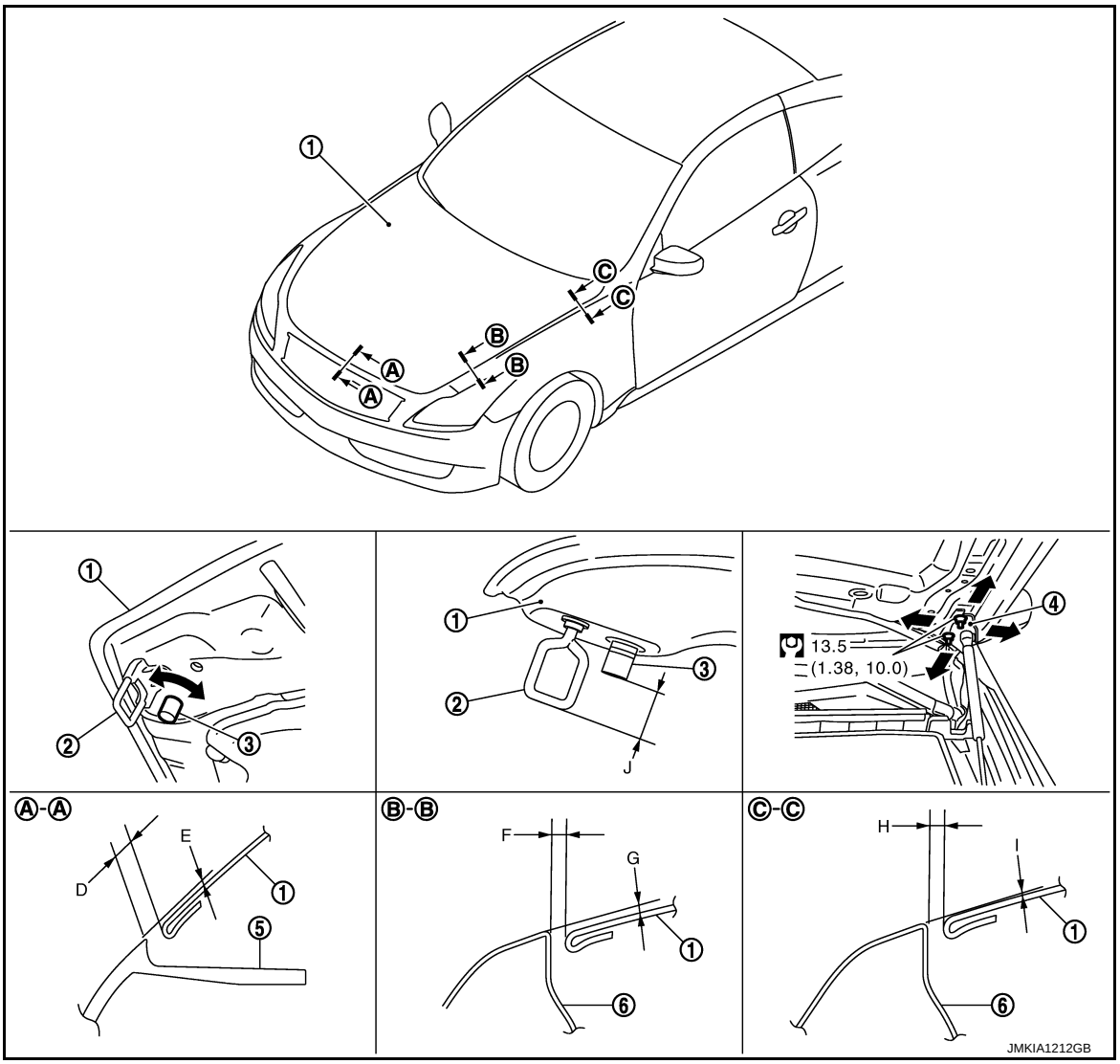

1. Hood assembly
2. Striker
3. Hood bumper rubber
4. Hood hinge
5. Front bumper
6. Front fender

Refer to GI-4, "Components" for symbols in the figure.

Portion				Standard	Right/left Clearance (MAX)
Hood – Front bumper	A – A	D	Clearance	2.0 – 5.0 mm (0.079 – 0.197 in)	—
		E	Surface height	–1.0 – 2.0 mm (–0.039 – 0.079 in)	—

Portion				Standard	Right/left Clearance (MAX)
Hood – Front fender	B – B	F	Clearance	2.5 – 4.5 mm (0.098 – 0.177 in)	2.0 mm (0.079 in)
		G	Surface height	–1.0 – 2.0 mm (–0.039 – 0.079 in)	—
	C – C	H	Clearance	2.5 – 4.5 mm (0.098 – 0.177 in)	2.0 mm (0.079 in)
		I	Surface height	–1.0 – 1.0 mm (–0.039 – 0.039 in)	—
Striker – Hood bumper rubber	—	J	Height difference	32.5 – 33.5 mm (1.280 – 1.319 in)	—

1. Check the clearance and the surface height between the hood and each part visually and by touching. (Fitting standard dimension in the table below should be satisfied.
2. In case out of specification, adjust them according to the procedures shown below.
3. Remove the striker and adjust the surface height of hood, front bumper and front fender according to the fitting standard dimension, by rotating hood bumper rubbers.
4. Adjust the height difference of striker, hood bumper rubber according to the fitting standard dimension.
5. Loosen the hood hinge mounting nuts on the hood.
6. Adjust the clearance of hood, front bumper and front fender according to the fitting standard dimension, for the hood.
7. Check that the hood lock primary latch is securely engaged with the striker by dropping hood from approximately 200 mm (7.874 in) height or pressing lightly on the hood.
   CAUTION:
   Never drop hood from a height of 300 mm (11.811 in) or more.
8. Install as static closing face of hood is 94 – 490 N·m (9.6 – 50.0 kg-m).
   NOTE:
   - Exercise vertical force on right side and left side of hood lock.
   - Do not press simultaneously both sides.
9. After adjustment tighten hood hinge mounting nuts to the specified torque.

HOOD ASSEMBLY : Disposal

INFOID:0000000008160734

DISPOSAL OF HOOD STAY

1. Fix hood stay (1) using a vise (C).
2. Using hacksaw (A) slowly make 2 holes in the hood stay, in numerical order as shown in the figure.
   CAUTION:
   - **When cutting a hole on hood stay, always cover a hacksaw using a shop cloth (B) to avoid scattering metal fragments or oil.**
   - **Wear eye protection (safety glasses).**
   - **Wear gloves.**

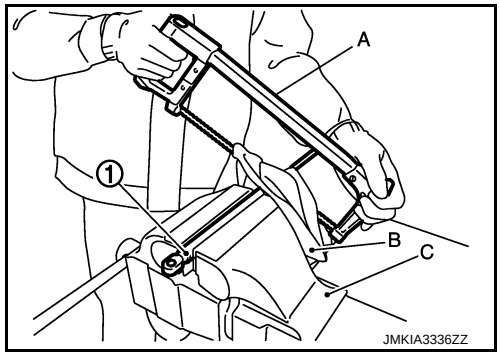

A: 20 mm (0.787 in)
B: Cut at the groove.

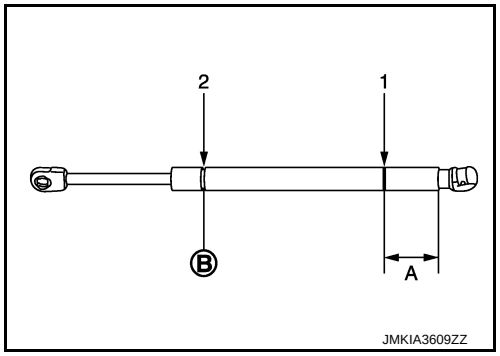

HOOD LOCK CONTROL

HOOD LOCK CONTROL : Exploded View

INFOID:0000000008160735

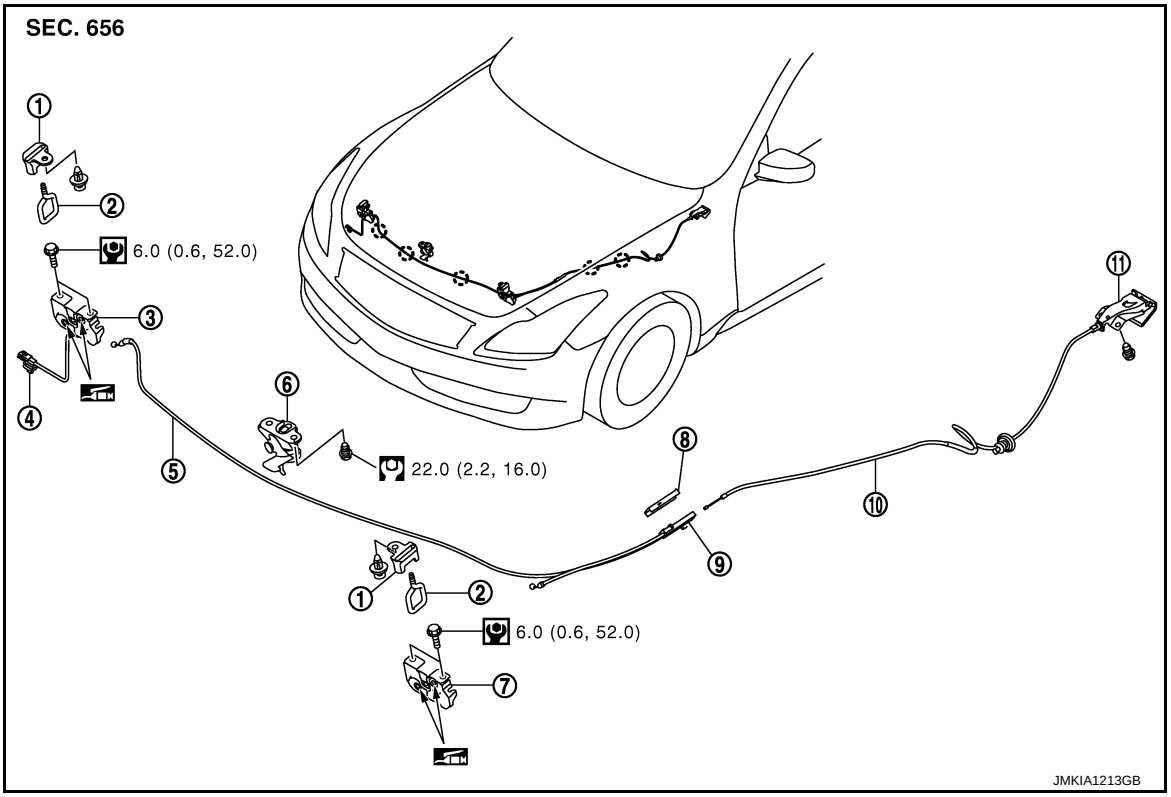

1. Hood lock cover	2. Striker	3. Hood lock (RH)
4. Hood lock switch harness connector	5. Hood lock control cable (Front)	6. Secondary latch
7. Hood lock (LH)	8. Hood lock control cable protector cover	9. Hood lock control cable protector
10. Hood lock control cable (Rear)	11. Hood lock opener	

: Clip

Refer to GI-4, "Components" for symbols in the figure.

HOOD LOCK CONTROL : Removal and Installation

INFOID:0000000008160736

REMOVAL

1. Remove the washer tank. Refer to WW-46, "Removal and Installation".
2. Remove the radiator core support ornament.

- Remove the radiator core support ornament mounting bolts and clips.

NOTE:
To remove the mounting bolts on both sides of radiator core support ornament, first remove the mounting bolts of front bumper (shown by arrows in the figure) and pull up the bumper edge slightly to get working clearance.

CAUTION:
Never apply excessive force while pulling front bumper to prevent front bumper and front fender from being damaged.

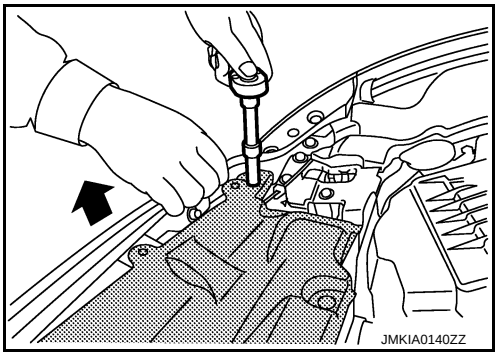

- Hold both sides of radiator core support ornament, pull it upwards and slide it rearwards of the vehicle.
- Disconnect the harness clips and hood lock control cable clips on radiator core support.

: Clip

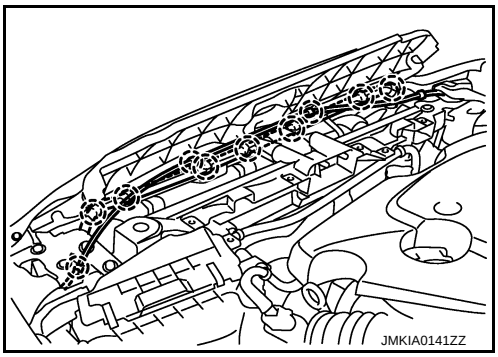

3. Remove the fender protector (LH). Refer to DLK-195, "Removal and Installation".
4. Disconnect hood lock switch (RH side) harness connector.
5. Remove the hood lock bracket mounting bolts, and remove the hood lock bracket assembly. Refer to DLK-192, "Exploded View".
6. Remove the hood lock mounting bolts, and disassemble the hood lock from the hood lock bracket.
7. Disconnect the hood lock control cable from the hood lock and clip it to the hood ledge.

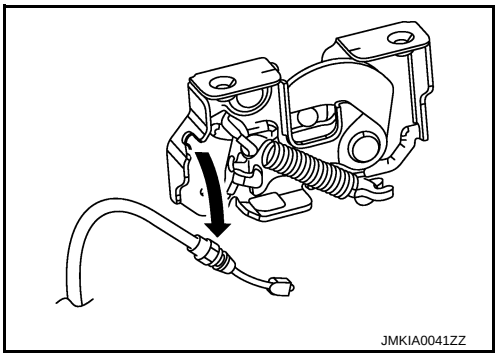

8. Remove the hood lock control cable protector (1) from the headlamp assembly (2).

: Pawl

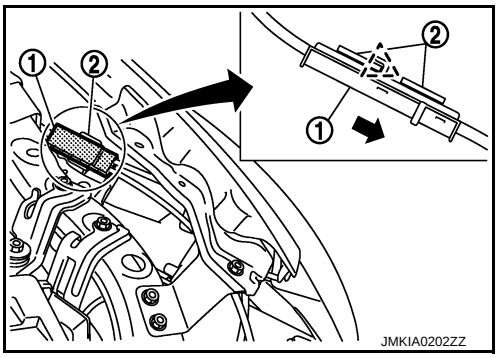

9. Remove the hood lock control cable cover from hood lock control cable protector.

10. Disconnect the hood lock control cable from hood lock control cable protector.

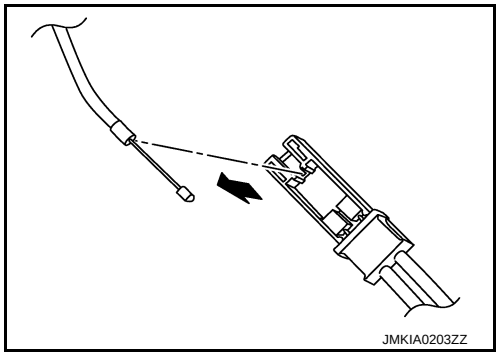

11. Remove the mounting screws and then remove the hood lock opener.
12. Remove the grommet on the dashboard, and pull the hood lock control cable toward the passenger compartment.
    CAUTION:
    While pulling, never damage (peel off) the outside of the hood lock control cable.

INSTALLATION

Install in the reverse order of removal.

CAUTION:

- **Never bend the cable too much, keeping the radius 100 mm (3.937 in) or more.**
- **Check that the hood lock control cable is properly engaged with the hood lock.**
- **After installing, perform hood fitting adjustment. Refer to DLK-187, "HOOD ASSEMBLY : Adjustment".**
- **After installing, perform the hood lock control inspection. Refer to DLK-191, "HOOD LOCK CONTROL : Inspection".**

HOOD LOCK CONTROL : Inspection

INFOID:0000000008160737

NOTE:
If the hood lock cable is bent or deformed, replace it.

1. Check that the secondary latch is properly engaged with the hood lock stay by hood weight.
2. While operating the hood opener, carefully check that the front end of the hood is raised by approximately 20 mm (0.787 in). Also check that the hood opener returns to the original position.
3. Check that the hood opener operating is 49 N (5.0 kg) or below.
4. Install so that static closing face of hood is 94 – 490 N·m (9.6 – 50.0 kg-m).
   NOTE:
   - Exercise vertical force on right side and left side of hood lock.
   - Do not press simultaneously both sides.
5. Check the hood lock lubrication condition. If necessary, apply body grease to the hood lock.

RADIATOR CORE SUPPORT

Exploded View

INFOID:0000000008160738

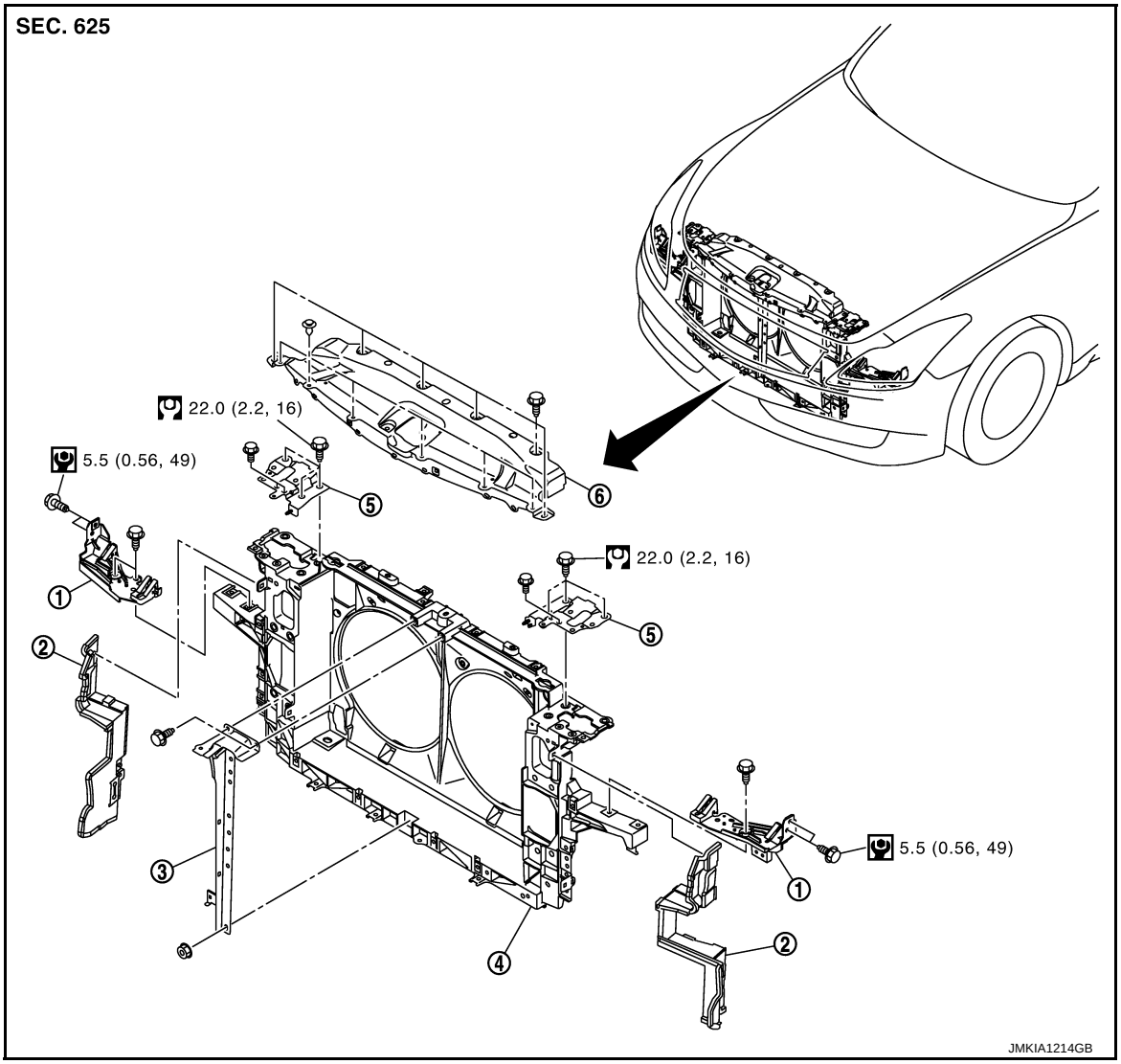

1. Headlamp bracket
2. Air guide
3. Hood lock stay
4. Radiator core support assembly
5. Hood lock bracket
6. Radiator core support ornament

Refer to GI-4, "Components" for symbols in the figure.

Removal and Installation

INFOID:0000000008160739

REMOVAL

1. Remove the front bumper fascia and front bumper reinforcement. Refer to EXT-15, "Removal and Installation".
2. Remove the radiator reservoir tank. Refer to CO-14, "Exploded View".
3. Remove horn (High/Low). Refer to HRN-4, "Removal and Installation".
4. Remove the radiator core support ornament.
   - Remove the radiator core support ornament mounting bolts and clips.
   NOTE:

In the case that only radiator core support ornament is removed (front bumper is not removed), remove them according to the procedures shown below.

- To remove the mounting bolts on both sides of radiator core support ornament, first remove the mounting bolts of front bumper (shown by arrows in the figure) and pull up the bumper edge slightly to get working clearance.

CAUTION:
Never apply excessive force while pulling front bumper to prevent front bumper and front fender from being damaged.

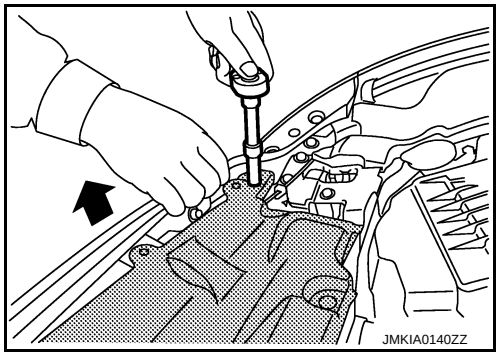

- Hold both sides of radiator core support ornament, pull it upwards and slide it rearwards of the vehicle.
- Disconnect the harness clips and hood lock control cable clips on radiator core support.

: Clip

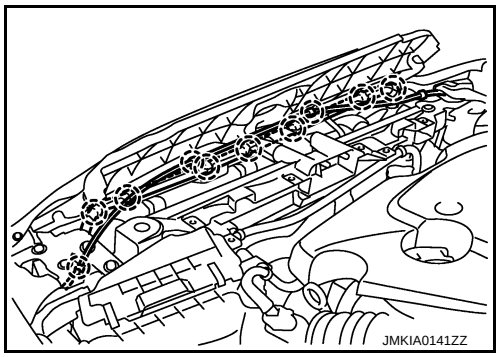

5. Remove the front combination lamp. Refer to EXL-129, "Removal and Installation".
6. Remove the hood lock bracket assembly.
7. Remove the washer inlet and washer tank. Refer to WW-46, "Removal and Installation".
8. Remove the ambient sensor. Refer to HAC-155, "Removal and Installation".
9. Remove the power steering fluid cooler. Refer to ST-60, "2WD : Exploded View".
10. Remove the air guide mounting clips and then remove air guide.
11. Disconnect the harness connector from refrigerant pressure sensor. Refer to HAC-159, "Removal and Installation".
12. Disconnect harness clamp from radiator core support.
13. Remove the hood lock stay.
14. Remove the engine lower cover. Refer to EXT-31, "Removal and Installation".
15. Drain engine coolant from radiator. Refer to CO-7, "Draining".
16. Remove the radiator upper hose and lower hose on radiator & condenser assembly sides.
17. Remove the A/T fluid cooler hose on radiator & condenser assembly sides. Refer to TM-298, "2WD : Exploded View" (2WD) or TM-300, "AWD : Exploded View" (AWD).
18. Disconnect condenser pipe assembly at one touch joint. Refer to HA-47, "CONDENSER PIPE ASSEMBLY : Removal and Installation".
19. Remove the radiator core support assembly mounting bolts, and pull out radiator core support assembly toward the front of the vehicle.
20. Disconnect the cooling fan and crush zone sensor harness connector and clamp.
21. Remove the radiator core support assembly.
22. Remove the following parts after removing the radiator core support assembly.
    - Headlamp bracket.
    - Cooling fan. Refer to CO-18, "Removal and Installation".
    - Radiator & condenser assembly. Refer to CO-15, "Removal and Installation".
    - Crush zone sensor. Refer to SR-21, "Removal and Installation".

INSTALLATION

Install in the reverse order of removal.

CAUTION:

After installation, refill the following.

- **Power stealing fluid. Refer to ST-12, "Inspection".**
- **A/T fluid. Refer to TM-261, "Changing".**
- **Engine coolant. Refer to CO-8, "Refilling".**

FRONT FENDER

Exploded View

INFOID:0000000008160740

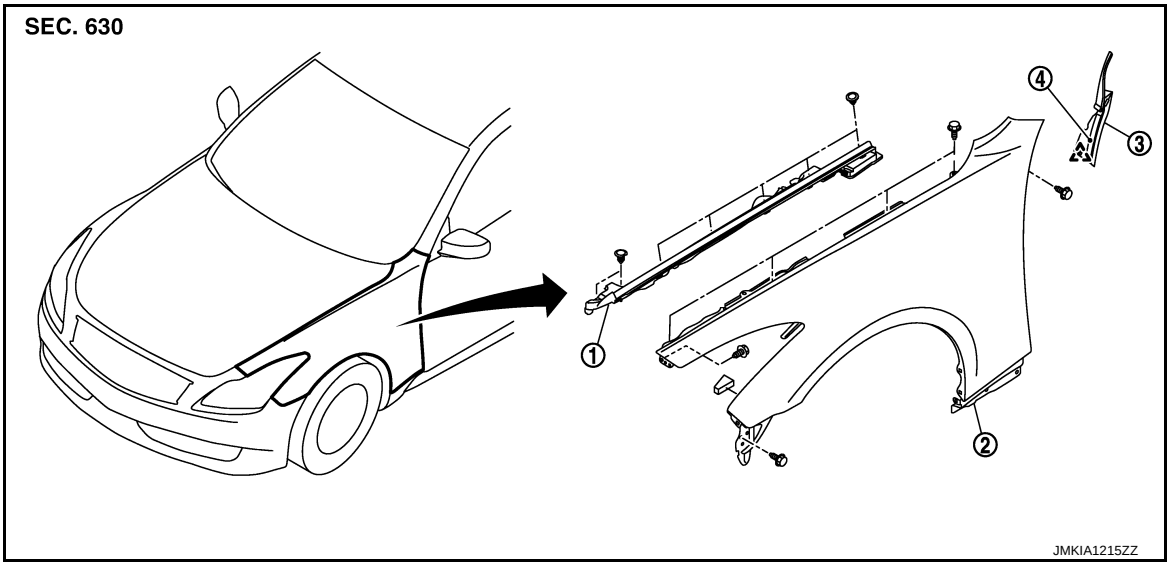

1. Hood seal assembly (side)
2. Front fender
3. Baffle assembly
4. Double-faced adhesive tape

Removal and Installation

INFOID:0000000008160741

REMOVAL

1. Remove the front bumper fascia. Refer to EXT-15, "Removal and Installation".
2. Remove the hood seal assembly (side) and baffle assembly.
3. Remove the front combination lamp. Refer to EXL-129, "Removal and Installation".
4. Remove the fender protector. Refer to EXT-26, "FENDER PROTECTOR : Removal and Installation".
5. Remove the center mudguard. Refer to EXT-29, "Removal and Installation".
6. Remove the mounting bolts and remove the front fender.

CAUTION:
While removing use a shop cloth to protect body from damaging.

INSTALLATION

Install in the reverse order of removal.

CAUTION:

- **After installing, apply touch-up paint (the body color) onto the head of the front fender mounting bolts.**
- **After installing, check front fender adjustment. Refer to DLK-187, "HOOD ASSEMBLY : Adjustment" and DLK-196, "DOOR ASSEMBLY : Adjustment".**

DOOR

DOOR ASSEMBLY

DOOR ASSEMBLY : Exploded View

INFOID:0000000008160742

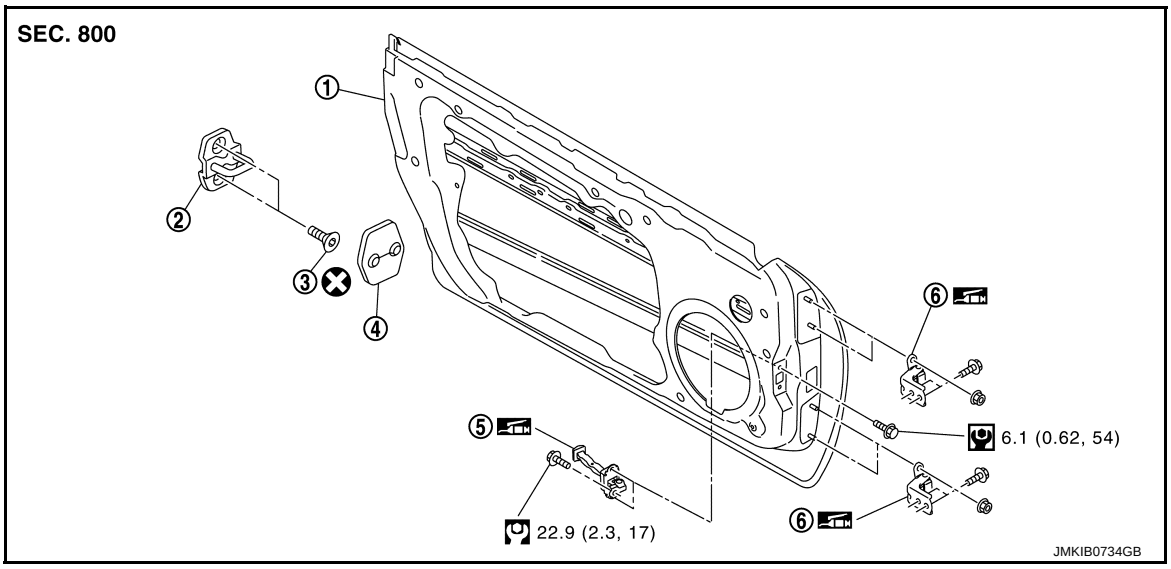

1.	Door panel	2.	Door striker	3.	TORX bolt
4.	Door striker cover	5.	Check link	6.	Door hinge (upper, lower)

Refer to GI-4, "Components" for symbols in the figure.

DOOR ASSEMBLY : Removal and Installation

INFOID:0000000008160743

REMOVAL

CAUTION:

- **When removing and installing the door assembly, support the door with a jack and cloth to protect the door and body.**
- **When removing and installing door assembly, perform the fitting adjustment. Refer to DLK-196, "DOOR ASSEMBLY : Adjustment".**
- **After installing, apply touch-up paint (the body color) onto the head of the hinge mounting nuts.**
- **Check the hinge rotating part for poor lubrication. If necessary, apply body grease.**
- **Operate with two workers, because of its heavy weight.**
- **Check door open/close operation after installation.**

1. Remove the mounting bolts of the check link on the vehicle.
2. Pull the lever and disconnect the door harness connector while removing tabs of door harness connector.
3. Remove the door side hinge mounting nuts, then remove the door assembly.

INSTALLATION

Install in the reverse order of removal.

DOOR ASSEMBLY : Adjustment

INFOID:0000000008160744

CLEARANCE, SURFACE HEIGHT AND SURFACE MISMATCH ADJUSTMENT

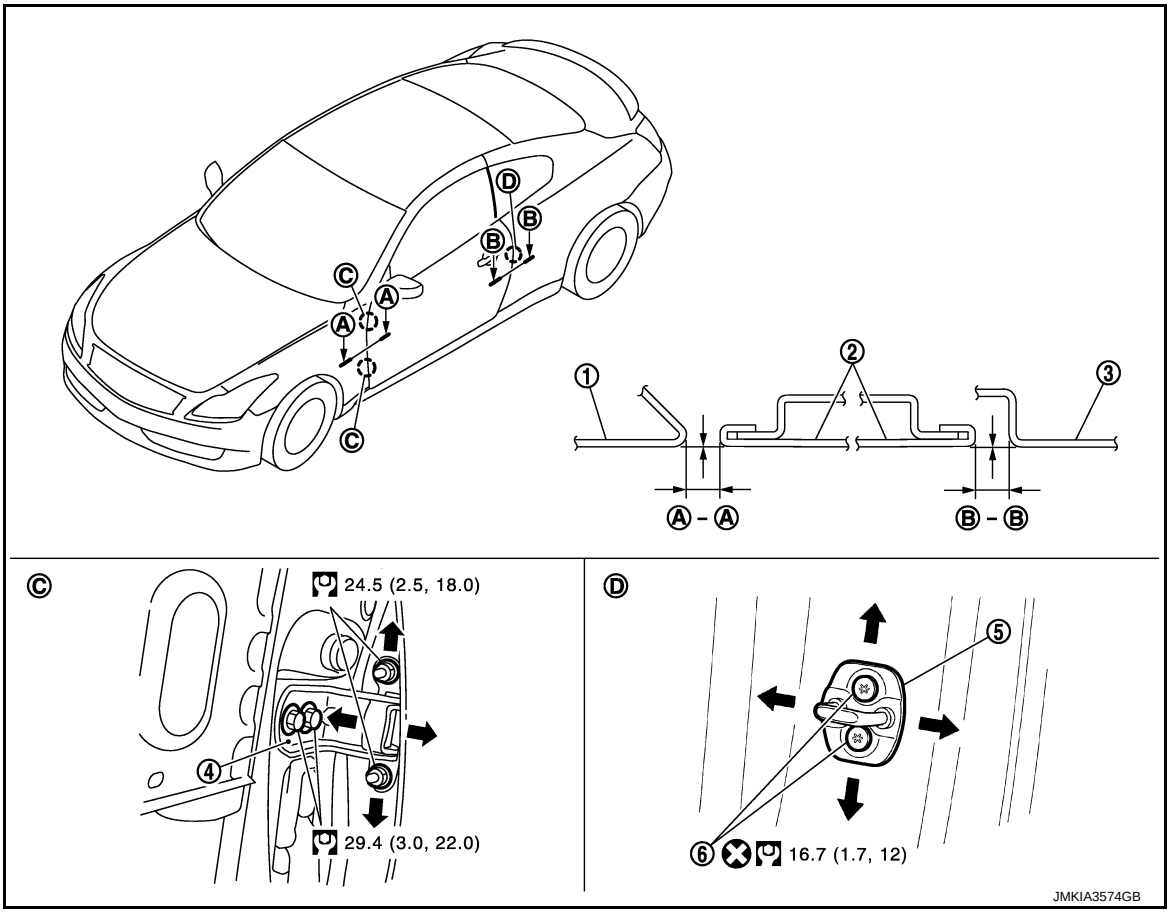

1. Front fender
2. Door panel
3. Rear fender
4. Door hinge
5. Door striker
6. TORX bolt

Refer to GI-4, "Components" for symbols in the figure.

1. Check the clearance and surface height and surface mismatch between the door and each part visually and by touching. (Fitting standard dimension in the table below should be satisfied.)

Portion		Clearance	Surface height
Front fender – Door	**A – A**	**2.5 – 4.5 mm (0.098 – 0.177 in)**	**–1.0 – 1.0 mm (–0.039 – 0.039 in)**
Door – Rear fender	**B – B**	**2.5 – 4.5 mm (0.098 – 0.177 in)**	**–1.0 – 1.0 mm (–0.039 – 0.039 in)**

2. In case out of specification, adjust them according to the procedures shown below.
3. Remove the front fender. Refer to DLK-195, "Removal and Installation".
4. Loosen the hinge mounting nuts on door side.
5. Adjust the surface height and surface mismatch of the door according to the fitting standard dimension.
6. Temporarily tighten the hinge mounting nuts on door side.
7. Loosen the hinge mounting bolts on body side.
8. Raise the door at rear end to adjust clearance of the front according to the fitting standard dimension.
9. After adjustment tighten bolts and nuts to the specified torque.
10. Install the front fender. Refer to DLK-195, "Removal and Installation".

STRIKER ADJUSTMENT

Adjust the striker so that it becomes parallel with the lock insertion direction.

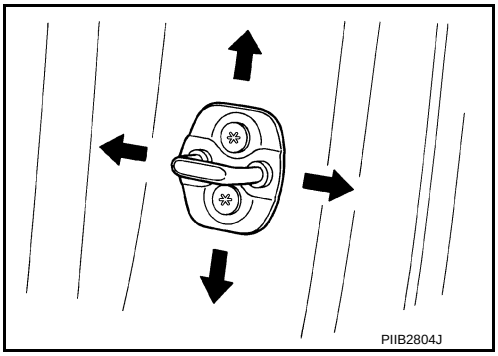

DOOR STRIKER

DOOR STRIKER : Exploded View

INFOID:0000000008160745

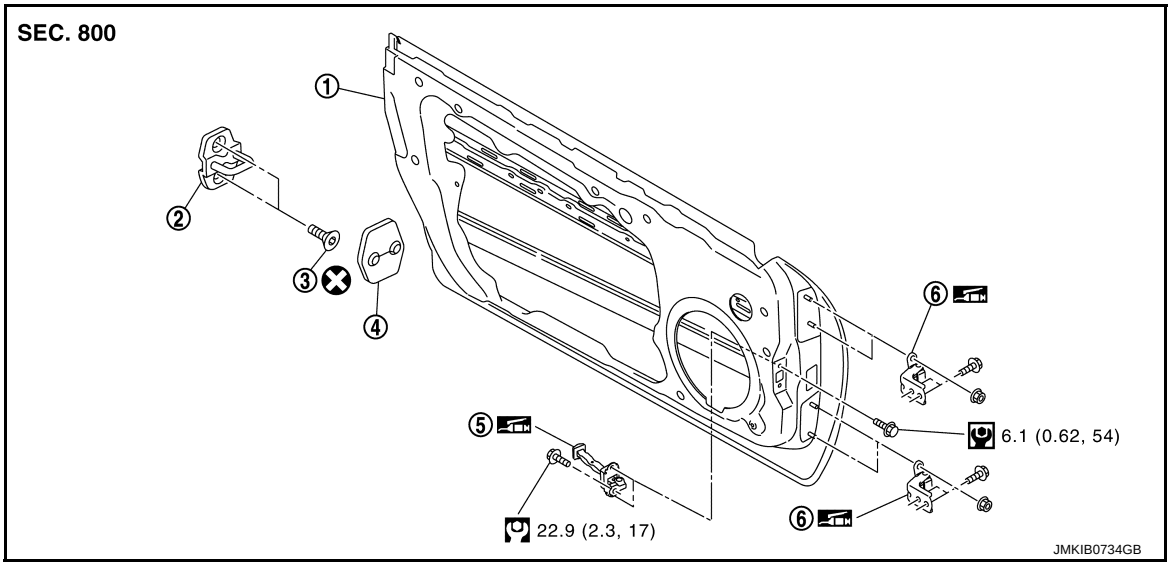

1.	Door panel	2.	Door striker	3.	TORX bolt
4.	Door striker cover	5.	Check link	6.	Door hinge (upper, lower)

Refer to GI-4, "Components" for symbols in the figure.

DOOR STRIKER : Removal and Installation

INFOID:0000000008160746

REMOVAL

1. Remove the door striker cover.
2. Remove the TORX bolts, and then remove the door striker.

INSTALLATION

Install in the reverse order of removal.

CAUTION:

- **Check the door open/close operation after installation.**
- **When removing and installing the door striker, be sure to perform the fitting adjustment. Refer to DLK-196, "DOOR ASSEMBLY : Adjustment".**

DOOR HINGE

DOOR HINGE : Exploded View

INFOID:0000000008160747

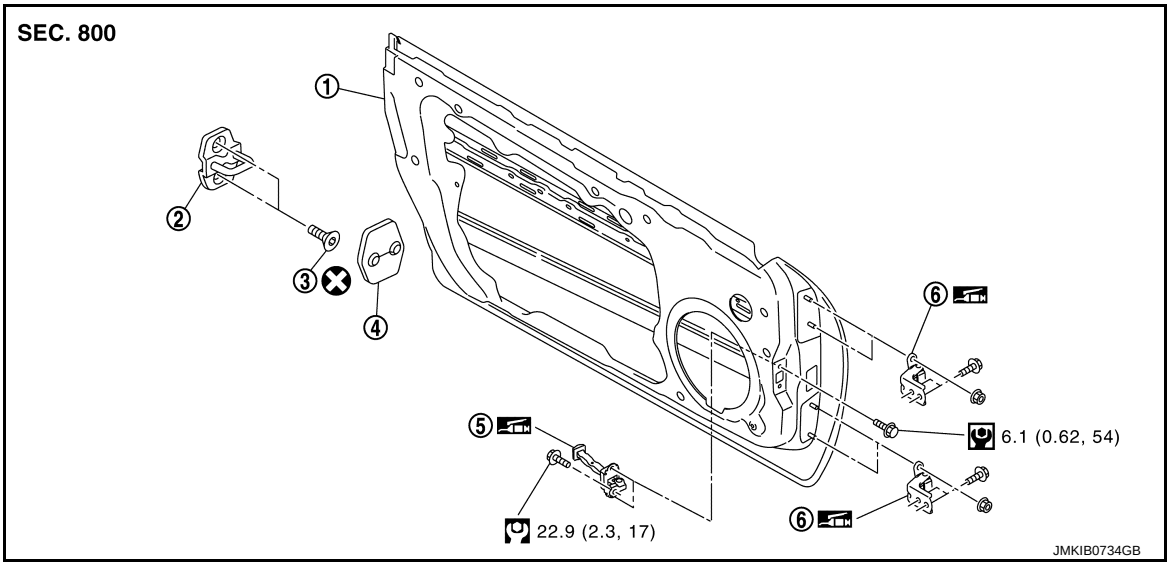

1.	Door panel	2.	Door striker	3.	TORX bolt
4.	Door striker cover	5.	Check link	6.	Door hinge (upper, lower)

Refer to GI-4, "Components" for symbols in the figure.

DOOR HINGE : Removal and Installation

INFOID:0000000008160748

REMOVAL

1. Remove the door assembly. Refer to DLK-196, "DOOR ASSEMBLY : Removal and Installation".
2. Remove the door hinge mounting bolts, and then remove the door hinge.

INSTALLATION

Install in the reverse order of removal.

CAUTION:

- **When removing and installing the door assembly, perform the fitting adjustment. Refer to DLK-196, "DOOR ASSEMBLY : Adjustment".**
- **After installation, apply touch-up paint (the body color) onto the head of the door hinge mounting nuts.**
- **Check the door hinge rotating part for poor lubrication. If necessary, apply body grease.**
- **Check the door open/close operation after installation.**

DOOR CHECK LINK

DOOR CHECK LINK : Exploded View

INFOID:0000000008160749

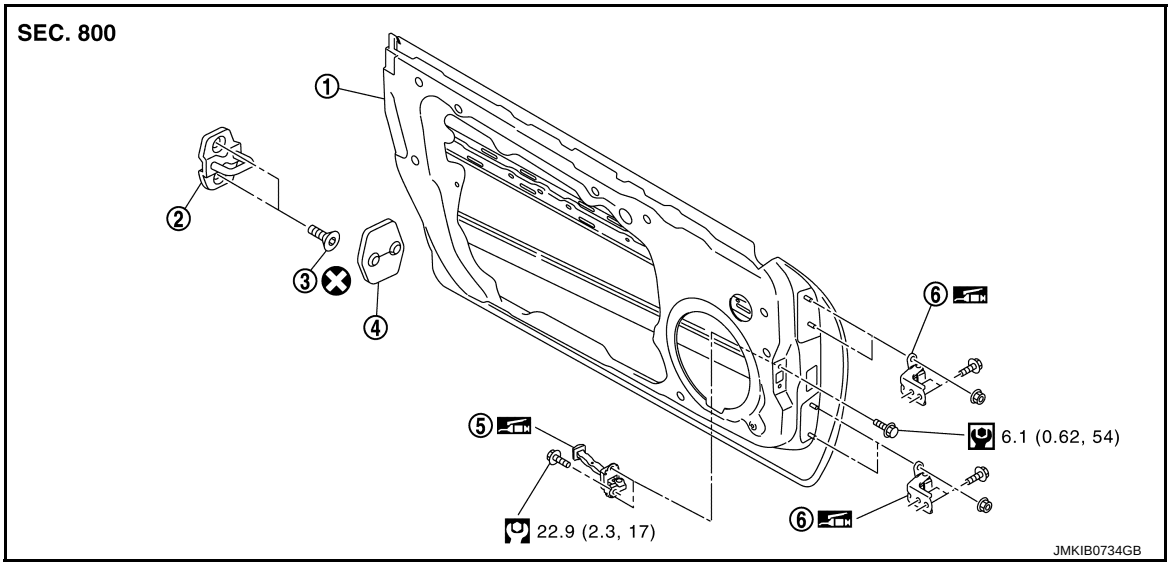

1.	Door panel	2.	Door striker	3.	TORX bolt
4.	Door striker cover	5.	Check link	6.	Door hinge (upper, lower)

Refer to GI-4, "Components" for symbols in the figure.

DOOR CHECK LINK : Removal and Installation

INFOID:0000000008160750

REMOVAL

1. Remove the door finisher. Refer to INT-12, "Removal and Installation".
2. Remove the door speaker.
3. Remove the mounting bolt of the door check link on the vehicle.
4. Remove the door check link mounting bolts on the door side.
5. Remove the door check link.

INSTALLATION

Install in the reverse order of removal.

CAUTION:

Check the door open/close operation after installation.

TRUNK LID

TRUNK LID ASSEMBLY

TRUNK LID ASSEMBLY : Exploded View

INFOID:0000000008160751

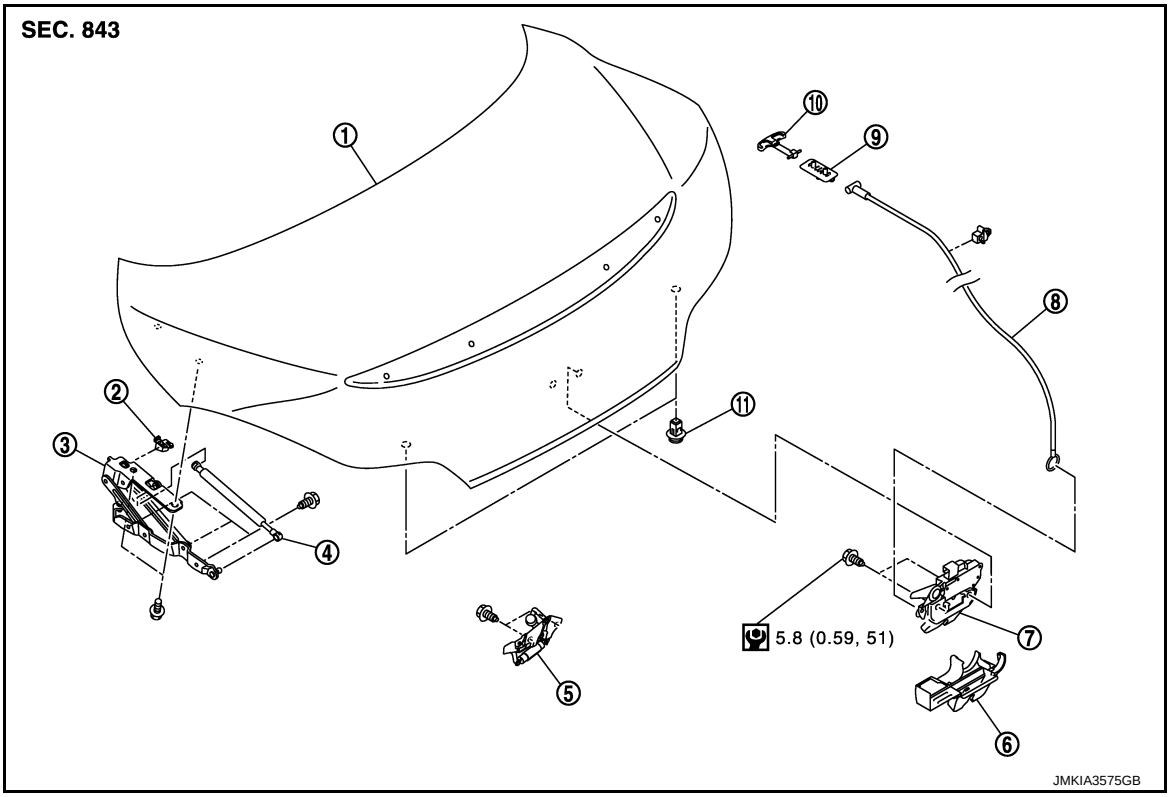

1. Trunk lid assembly
2. Trunk lid hinge stopper
3. Trunk lid hinge
4. Trunk lid stay
5. Trunk lid striker
6. Trunk lid lock cover
7. Trunk lid lock assembly
8. Trunk lid opener cable
9. Trunk lid emergency opener lever holder
10. Trunk lid emergency opener lever
11. Bumper rubber

Refer to GI-4, "Components" for the symbols in the figure.

TRUNK LID ASSEMBLY : Removal and Installation

INFOID:0000000008160752

REMOVAL

1. Remove the trunk lid finisher inner. Refer to INT-31, "Removal and Installation".
2. Disconnect the connectors in the trunk lid, and remove the harness clamps to pull the harness out of the trunk lid.
3. Remove trunk lid stay at trunk lid side.
   NOTE:
   Insert flat-bladed screwdriver into the gap and remove holder.
   WARNING:
   Body injury may occur if no supporting rod is holding the trunk lid open when removing the stay.
   CAUTION:
   While removing use a shop cloth or tape to protect from damaging.
4. Remove the trunk lid hinge mounting bolts on trunk lid side and remove the trunk lid assembly.

INSTALLATION

Install in the reverse order of removal.

CAUTION:

- **After installing, apply touch-up paint (the body color) onto the head of the hinge mounting bolts.**

- **After installing, check operation.**
- **After installing, perform fitting adjustment. Refer to DLK-202, "TRUNK LID ASSEMBLY : Adjustment".**

TRUNK LID ASSEMBLY : Adjustment

INFOID:0000000008160753

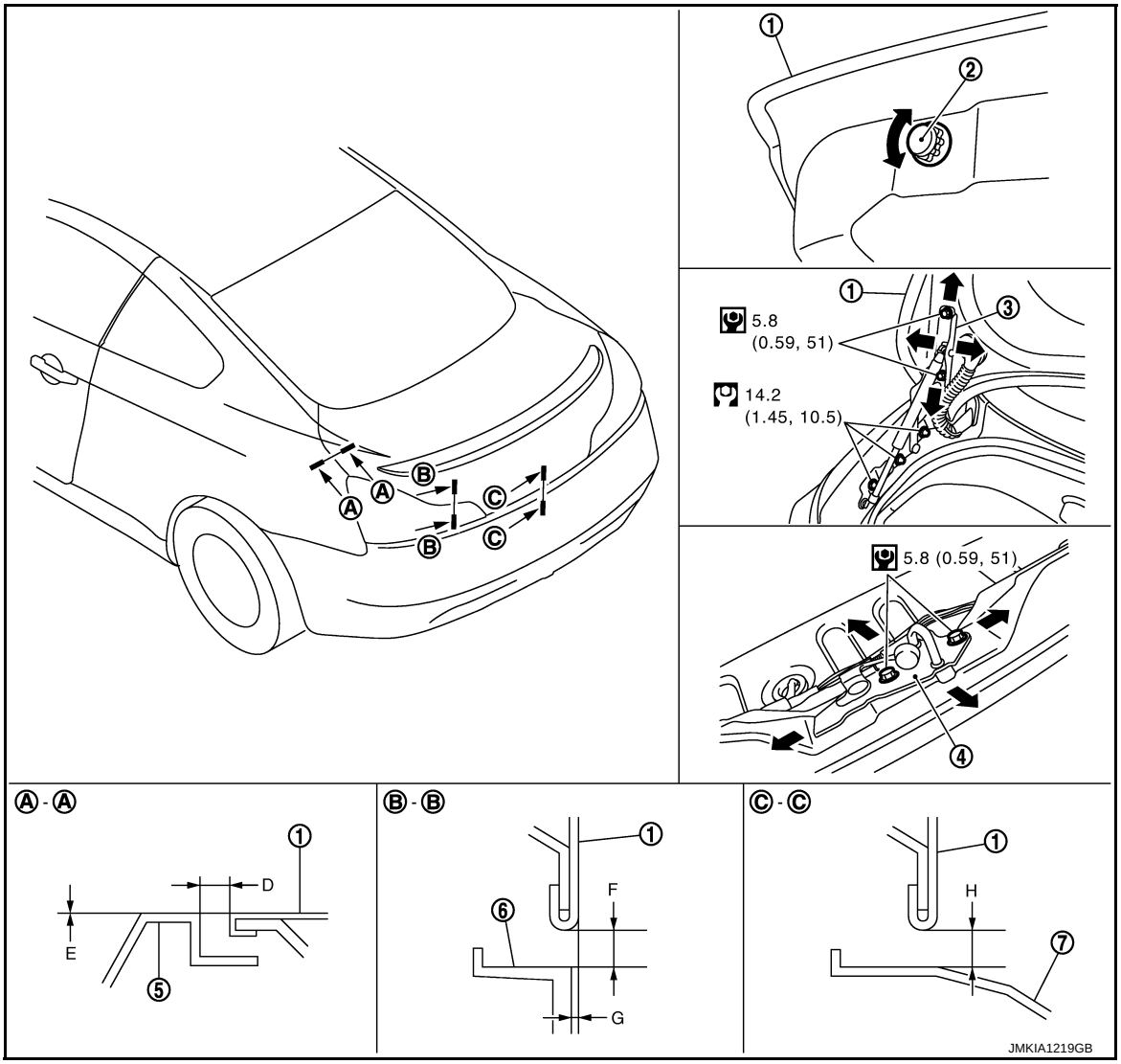

1. Trunk lid assembly
2. Bumper rubber
3. Trunk lid hinge
4. Trunk lid striker
5. Rear fender
6. Rear combination lamp
7. Rear bumper

Refer to GI-4, "Components" for symbols in the figure.

1. Check the clearance and the evenness between the trunk lid and each part visually and by touching. (Fitting standard dimension in the table below should be satisfied.)

Portion				Standard	Right/left Clearance (MAX)
Trunk lid – Rear fender	A – A	D	Clearance	2.5 – 4.5 mm (0.098 – 0.177 in)	1.5 mm (0.059 in)
		E	Surface height	–1.5 – 0.5 mm (–0.059 – 0.020 in)	1.5 mm (0.059 in)

Portion				Standard	Right/left Clearance (MAX)
Trunk lid – Rear combination lamp	B – B	F	Clearance	3.7 – 7.7 mm (0.146 – 0.303 in)	3.0 mm (0.118 in)
		G	Surface height	–2.5 – 1.5 mm (–0.098 – 0.059 in)	2.0 mm (0.079 in)
Trunk lid – Rear bumper	C – C	H	Clearance	4.0 – 8.0 mm (0.157 – 0.315 in)	—

2. In case out of specification, adjust them according to the procedures shown below.
3. Loosen the bumper rubber.
4. Loosen the striker mounting bolts.
5. Lift up the trunk lid approximately 100 – 150 mm (3.937 – 5.906 in) height then close it lightly and check that it is engaged firmly with the trunk lid closed.
6. Check the clearance and evenness.
7. Finally tighten the trunk lid striker.

TRUNK LID STRIKER

TRUNK LID STRIKER : Exploded View

INFOID:0000000008160754

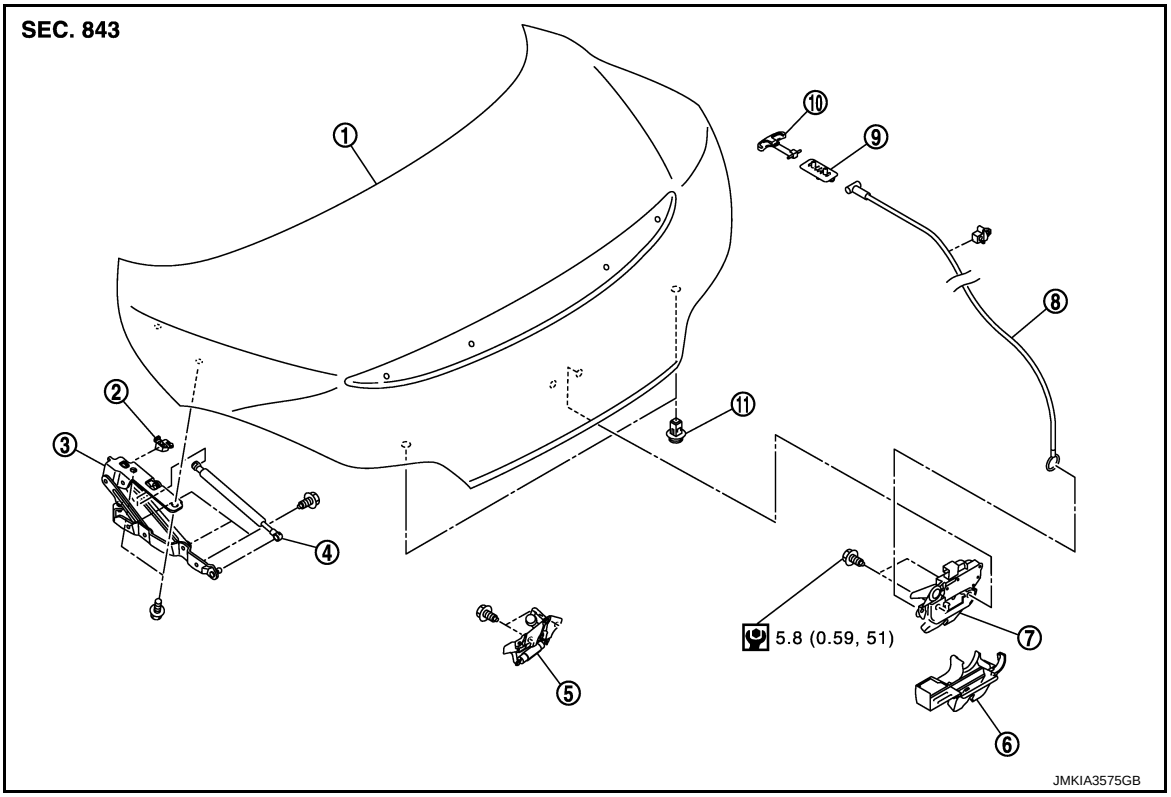

1. Trunk lid assembly
2. Trunk lid hinge stopper
3. Trunk lid hinge
4. Trunk lid stay
5. Trunk lid striker
6. Trunk lid lock cover
7. Trunk lid lock assembly
8. Trunk lid opener cable
9. Trunk lid emergency opener lever holder
10. Trunk lid emergency opener lever
11. Bumper rubber

Refer to GI-4, "Components" for the symbols in the figure.

TRUNK LID STRIKER : Removal and Installation

INFOID:0000000008160755

REMOVAL

1. Remove the trunk rear plate. Refer to INT-29, "Exploded View".
2. Remove the bolts, and remove the trunk lid striker.

INSTALLATION

Install in the reverse order of removal.

CAUTION:

After installing, perform fitting adjustment. Refer to DLK-202, "TRUNK LID ASSEMBLY : Adjustment".

TRUNK LID HINGE

TRUNK LID HINGE : Exploded View

INFOID:0000000008160756

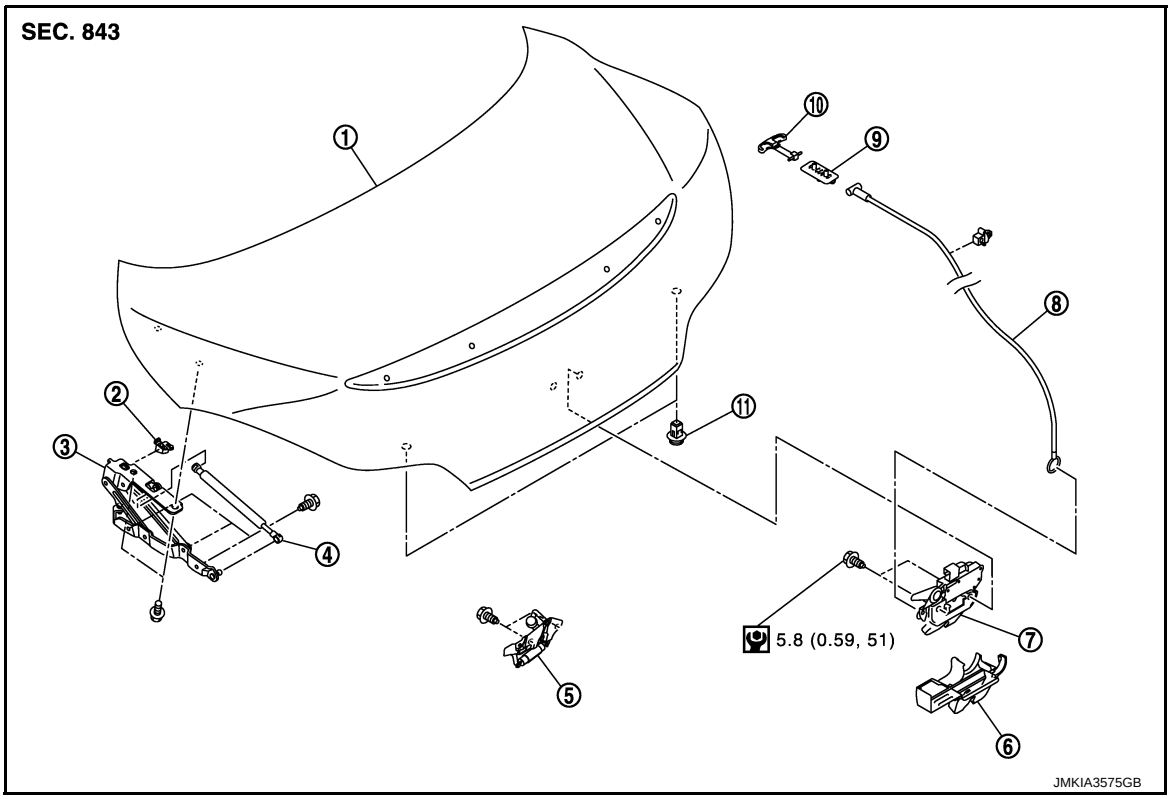

1. Trunk lid assembly
2. Trunk lid hinge stopper
3. Trunk lid hinge
4. Trunk lid stay
5. Trunk lid striker
6. Trunk lid lock cover
7. Trunk lid lock assembly
8. Trunk lid opener cable
9. Trunk lid emergency opener lever holder
10. Trunk lid emergency opener lever
11. Bumper rubber

Refer to GI-4, "Components" for the symbols in the figure.

TRUNK LID HINGE : Removal and Installation

INFOID:0000000008160757

REMOVAL

1. Remove the trunk lid assembly. Refer to DLK-201, "TRUNK LID ASSEMBLY : Removal and Installation".
2. Remove the trunk drip cover. Refer to EXT-41, "TRUNK DRIP COVER : Removal and Installation".
3. Remove the trunk lid stay. Refer to DLK-205, "TRUNK LID STAY : Removal and Installation".
4. Remove the trunk lid hinge mounting bolts (body side), and then remove the trunk lid hinge.

INSTALLATION

Install in the reverse order of removal.

CAUTION:
- **Check the trunk lid open/close operation after installation.**
- **Check the hinge rotating part for poor lubrication. If necessary, apply body grease.**
- **When removing and installing the trunk lid assembly, perform the fitting adjustment. Refer to DLK-202, "TRUNK LID ASSEMBLY : Adjustment".**
- **After installation, apply touch-up paint (the body color) onto the head of the hinge mounting nuts.**

TRUNK LID STAY

TRUNK LID STAY : Exploded View

INFOID:0000000008160758

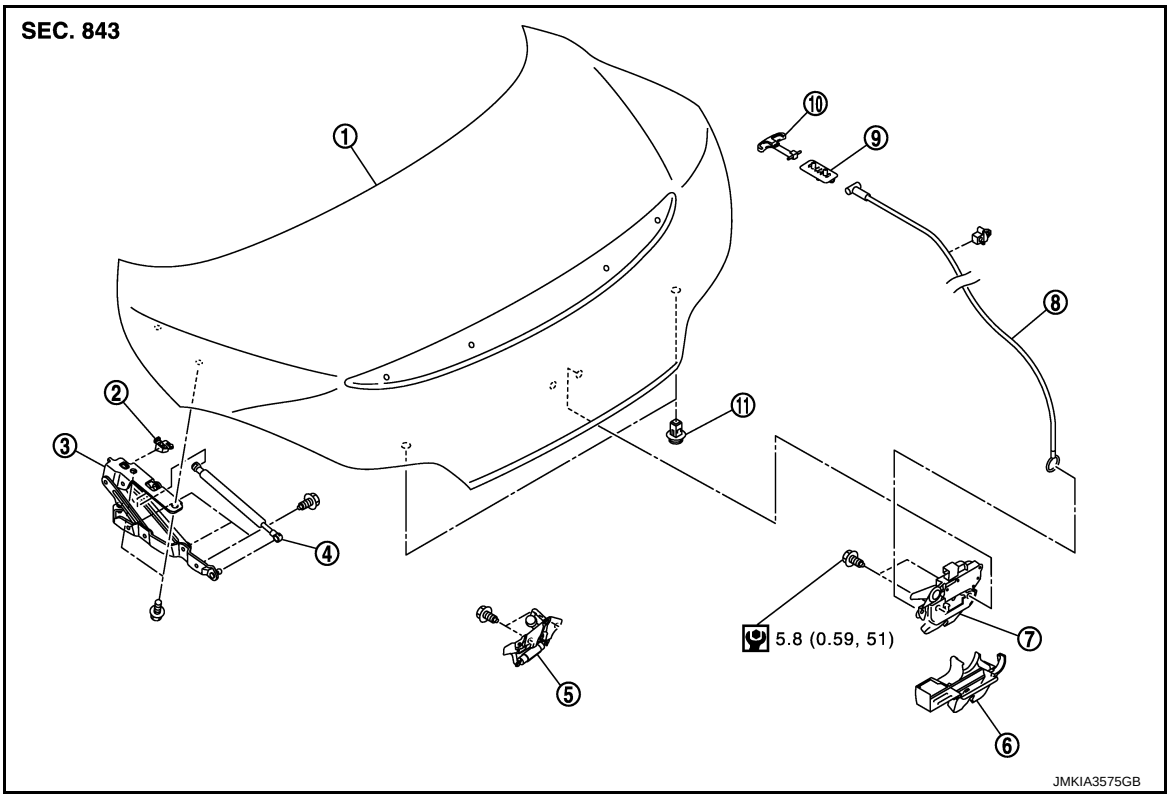

1. Trunk lid assembly	2. Trunk lid hinge stopper	3. Trunk lid hinge
4. Trunk lid stay	5. Trunk lid striker	6. Trunk lid lock cover
7. Trunk lid lock assembly	8. Trunk lid opener cable	9. Trunk lid emergency opener lever holder
10. Trunk lid emergency opener lever	11. Bumper rubber	

Refer to GI-4, "Components" for the symbols in the figure.

TRUNK LID STAY : Removal and Installation

INFOID:0000000008160759

WARNING:
Body injury may occur if no supporting rod is holding the trunk lid open when removing the trunk lid stay.

REMOVAL

1. Remove the trunk drip cover. Refer to EXT-41, "TRUNK DRIP COVER : Removal and Installation".
2. Insert flat-bladed screwdriver into the gap and remove the trunk lid stay.

INSTALLATION

Install in the reverse order of removal.

CAUTION:
Check the trunk lid open/close operation after installation.

TRUNK LID STAY : Disposal

INFOID:0000000008160760

1. Fix trunk lid stay (1) using a vise (C).
2. Using hacksaw (A) slowly make 2 holes in the trunk lid stay, in numerical order as shown in the figure.
   CAUTION:
   - **When cutting a hole on trunk lid stay, always cover a hacksaw using a shop cloth (B) to avoid scattering metal fragments or oil.**
   - **Wear eye protection (safety glasses).**
   - **Wear gloves.**

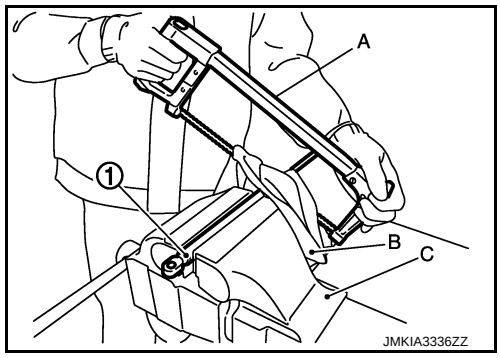

A: 20 mm (0.787 in)

B: Cut at the groove.

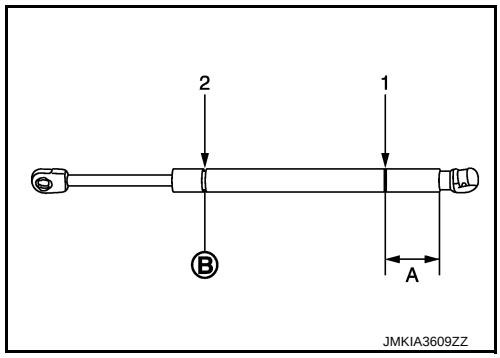

TRUNK LID WEATHERSTRIP

TRUNK LID WEATHERSTRIP : Exploded View

INFOID:0000000008160761

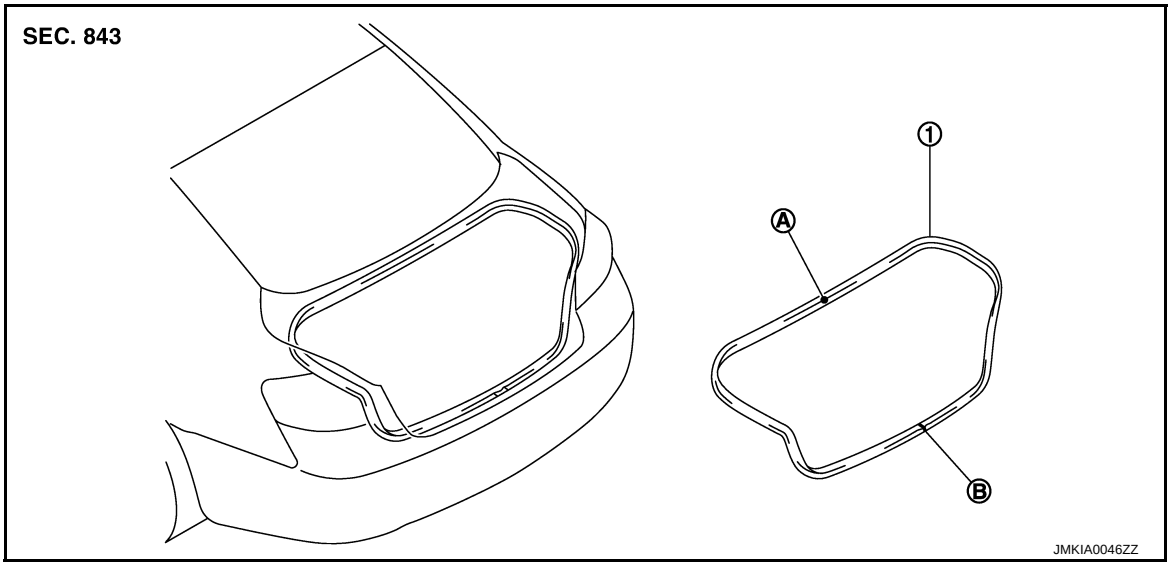

1. Weather-strip (A) Seam (upper) (B) Seam (lower)

TRUNK LID WEATHERSTRIP : Removal and Installation

INFOID:0000000008160762

REMOVAL

Pull up and remove engagement with body from weather-strip joint.

CAUTION:

After removal, never pull strongly on the weather-strip.

INSTALLATION

1. Align the weather-strip seam (upper) with mark of the body panel and weather-strip onto the vehicle.
2. Align the weather-strip seem (lower) with center of the striker and weather-strip onto the vehicle.
3. After installation, pull the weather-strip gently to ensure that there is no loose section.
   NOTE:
   Check that the weather-strip fits tightly at each corner and trunk rear plate.

DOOR LOCK

DOOR LOCK

DOOR LOCK : Exploded View

INFOID:0000000008160763

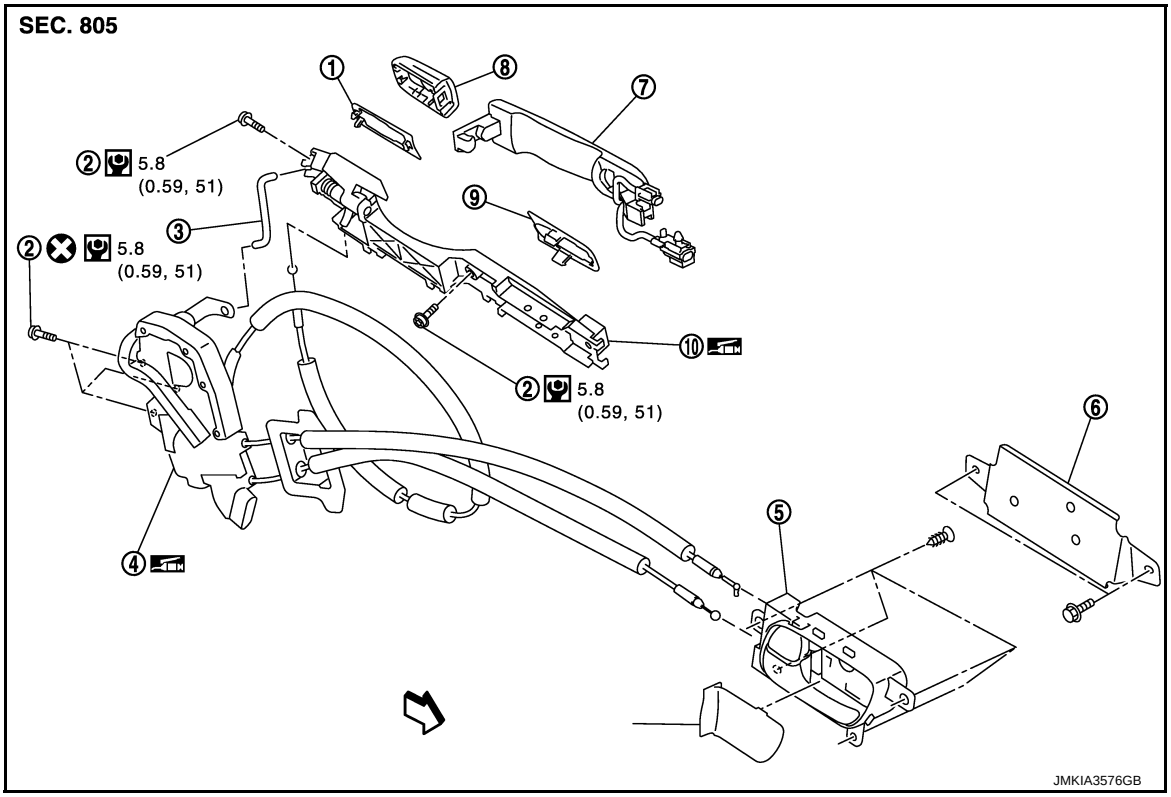

1. Rear gasket
2. TORX bolt
3. Key rod (Driver side only)
4. Door lock assembly
5. Inside handle
6. Inside handle bracket
7. Outside handle
8. Door key cylinder assembly (Driver side)
   Outside handle escutcheon (Passenger side)
9. Front gasket
10. Outside handle bracket

⇦ : Vehicle front

Refer to GI-4, "Components" for symbols in the figure.

DOOR LOCK : Removal and Installation

INFOID:0000000008160764

REMOVAL

1. Remove the door finisher. Refer to INT-12, "Removal and Installation".
2. Remove the door glass and door module assembly.
   - Door glass: Refer to GW-18, "Removal and Installation".
   - Door module: Refer to GW-21, "Removal and Installation".
3. Remove the door side grommet, and loosen the door key cylinder assembly (driver side) and outside handle escutcheon (passenger side) TORX bolt from grommet hole.
   CAUTION:

Never forcibly remove the TORX bolt.

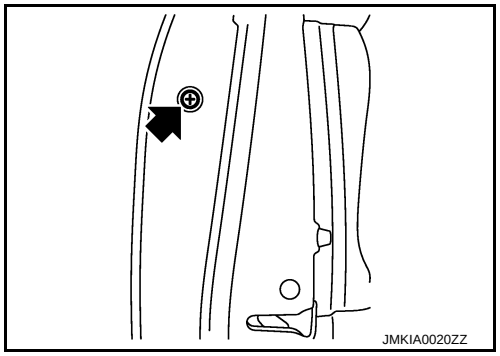

4. Disconnect the door antenna and door request switch connector and remove the harness clamp.
5. Reach in to separate the key rod connection (on the handle).
6. While pulling the outside handle, remove the door key cylinder assembly.

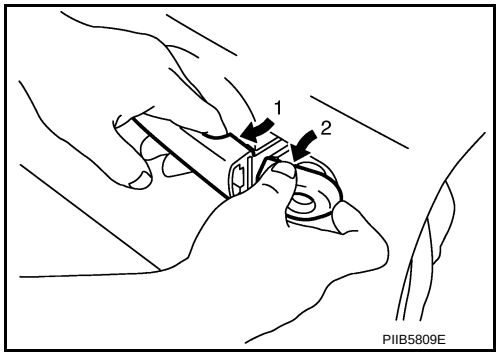

7. Slide toward rear of vehicle, and pull forward to remove the outside handle.

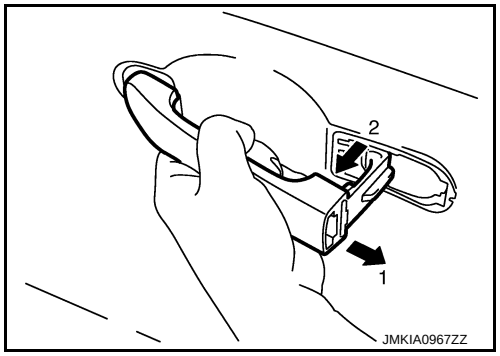

8. Remove the front gasket and rear gasket.

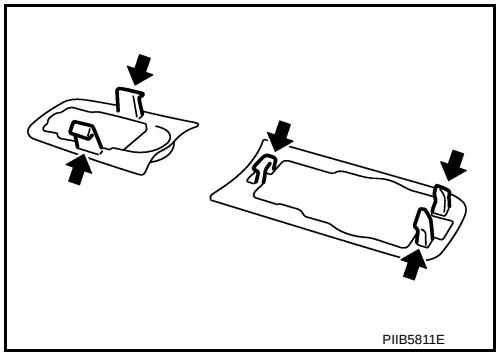

9. Remove the TORX bolts, and remove the door lock assembly.

10. Remove the TORX bolt of the outside handle bracket.

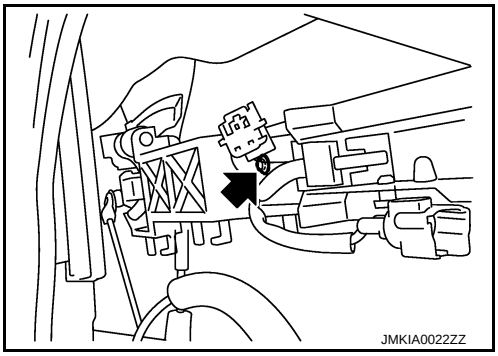

11. While pulling the outside handle bracket, slide toward rear of vehicle to remove the outside handle bracket.

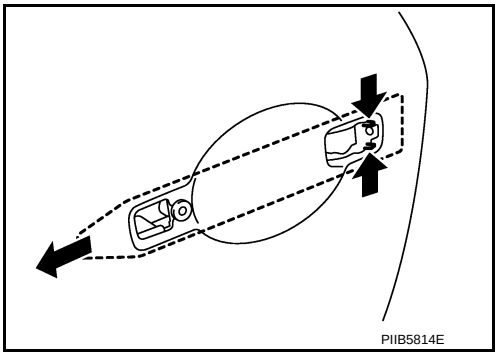

12. Disconnect the door lock actuator connector and remove the door lock assembly.
13. Reach in to separate the outside handle cable connection.

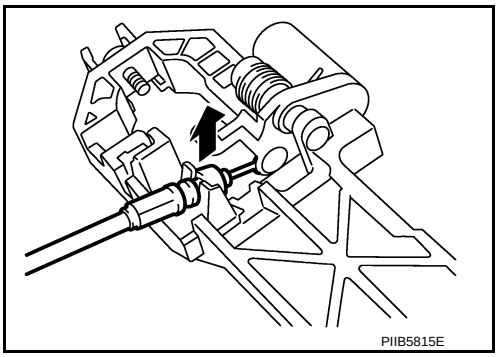

INSTALLATION

Install in the reverse order of removal.

CAUTION:

To install each rod, rotate the rod holder until a click is felt.

INSIDE HANDLE

INSIDE HANDLE : Exploded View

INFOID:0000000008160765

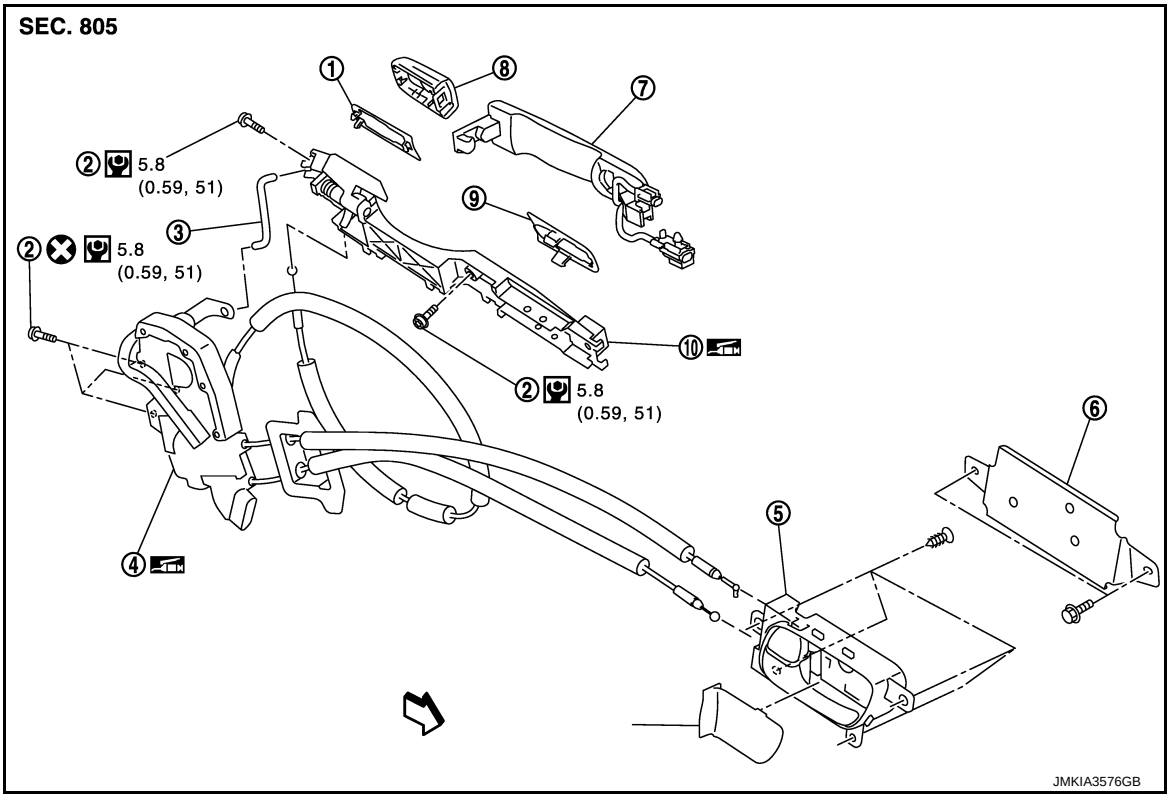

1. Rear gasket
2. TORX bolt
3. Key rod (Driver side only)
4. Door lock assembly
5. Inside handle
6. Inside handle bracket
7. Outside handle
8. Door key cylinder assembly (Driver side)
   Outside handle escutcheon (Passenger side)
9. Front gasket
10. Outside handle bracket

⇦ : Vehicle front

Refer to GI-4, "Components" for symbols in the figure.

INSIDE HANDLE : Removal and Installation

INFOID:0000000008160766

REMOVAL

1. Remove the door finisher. Refer to INT-12, "Removal and Installation".
2. Remove the inside handle mounting bolts.
3. Disconnect the inside handle cable, and then remove the inside handle.

INSTALLATION

Install in the reverse order of removal.

CAUTION:

- **Check the door lock/unlock operation after installation.**
- **Check the door open/close operation after installation.**

OUTSIDE HANDLE

OUTSIDE HANDLE : Exploded View

INFOID:0000000008160767

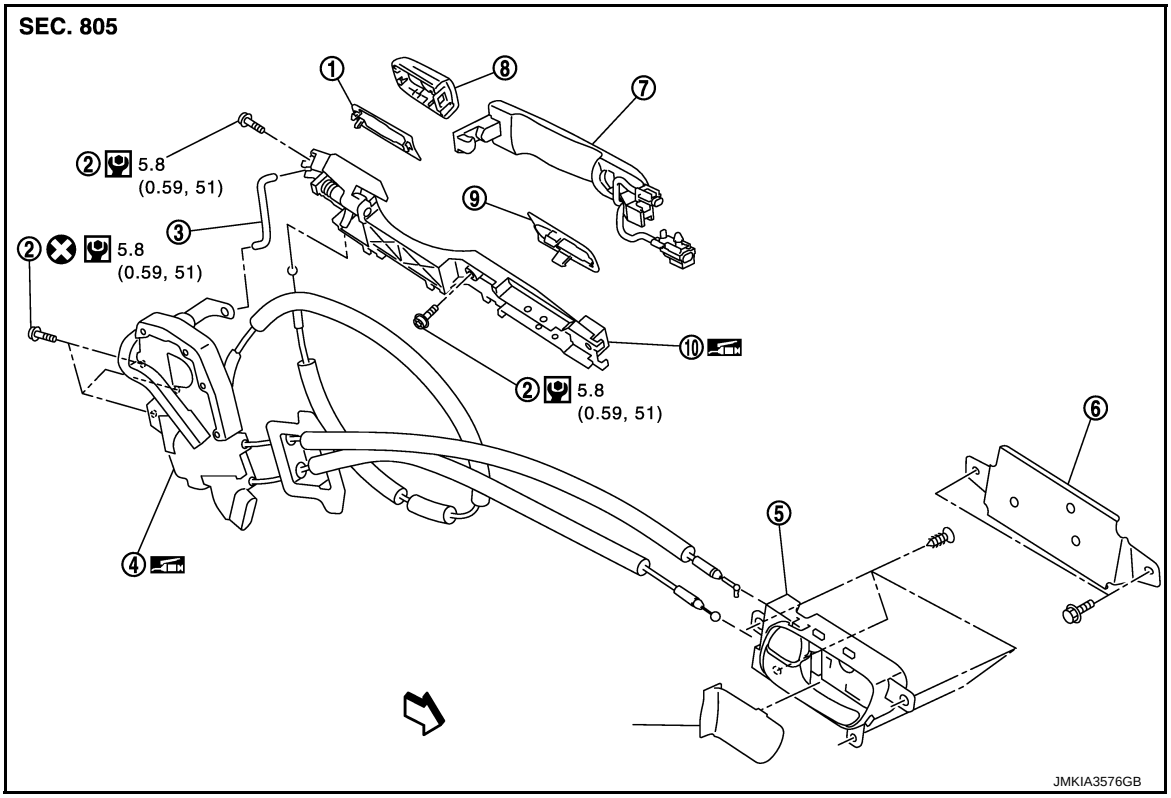

1. Rear gasket
2. TORX bolt
3. Key rod (Driver side only)
4. Door lock assembly
5. Inside handle
6. Inside handle bracket
7. Outside handle
8. Door key cylinder assembly (Driver side)
   Outside handle escutcheon (Passenger side)
9. Front gasket
10. Outside handle bracket

⇦ : Vehicle front

Refer to GI-4, "Components" for symbols in the figure.

OUTSIDE HANDLE : Removal and Installation

INFOID:0000000008160768

REMOVAL

1. Remove the door finisher. Refer to INT-12, "Removal and Installation".
2. Remove the door glass and door module assembly.
   - Door glass: Refer to GW-18, "Removal and Installation".
   - Door module: Refer to GW-21, "Removal and Installation".
3. Remove the door side grommet, and loosen door key cylinder assembly (driver side) and outside handle escutcheon (passenger side) TORX bolt from grommet hole.
   CAUTION:

Never forcibly remove the TORX bolt.

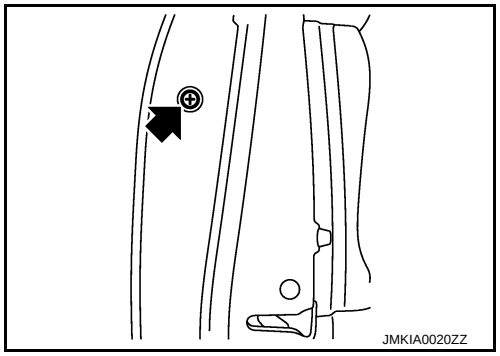

4. Disconnect the door antenna and door request switch connector and remove the harness clamp.
5. Reach in to separate the key rod connection (on the handle).
6. While pulling the outside handle, remove the door key cylinder assembly.

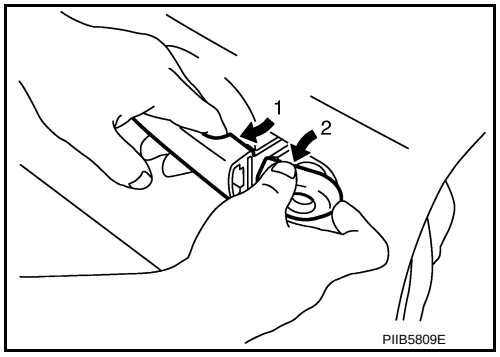

7. Slide toward rear of vehicle, and pull forward to remove the outside handle.

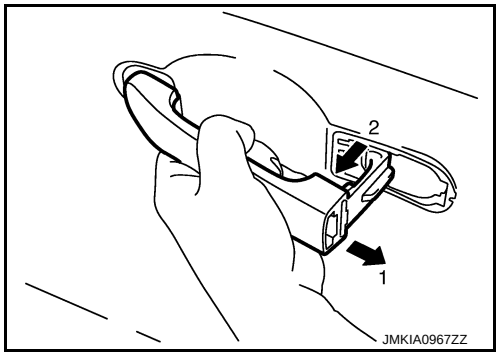

8. Remove the front gasket and rear gasket.

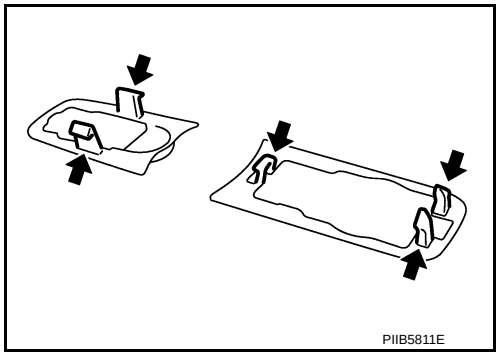

9. Remove the TORX bolt of the outside handle bracket.

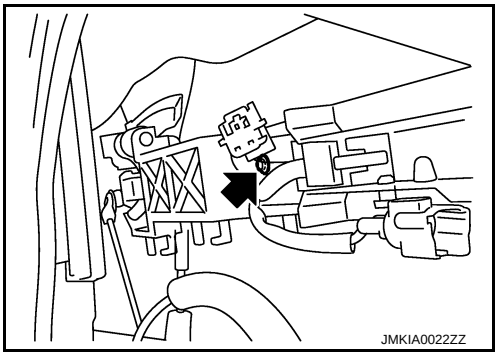

10. While pulling the outside handle bracket, slide toward rear of vehicle to remove the outside handle bracket.

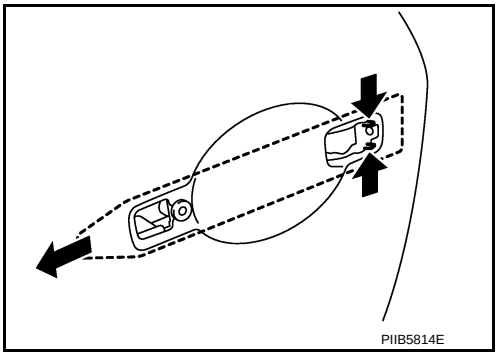

11. Reach in to separate the outside handle cable connection.

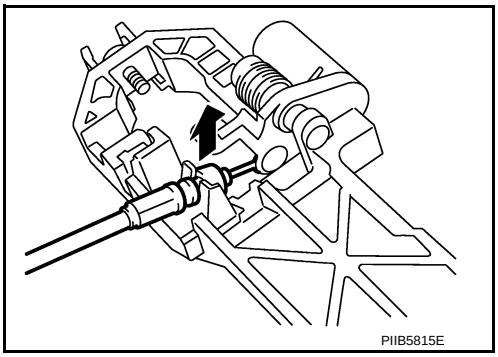

INSTALLATION

Install in the reverse order of removal.

CAUTION:

To install each rod, rotate the rod holder until a click is felt.

TRUNK LID LOCK

TRUNK LID LOCK

TRUNK LID LOCK : Exploded View

INFOID:0000000008160769

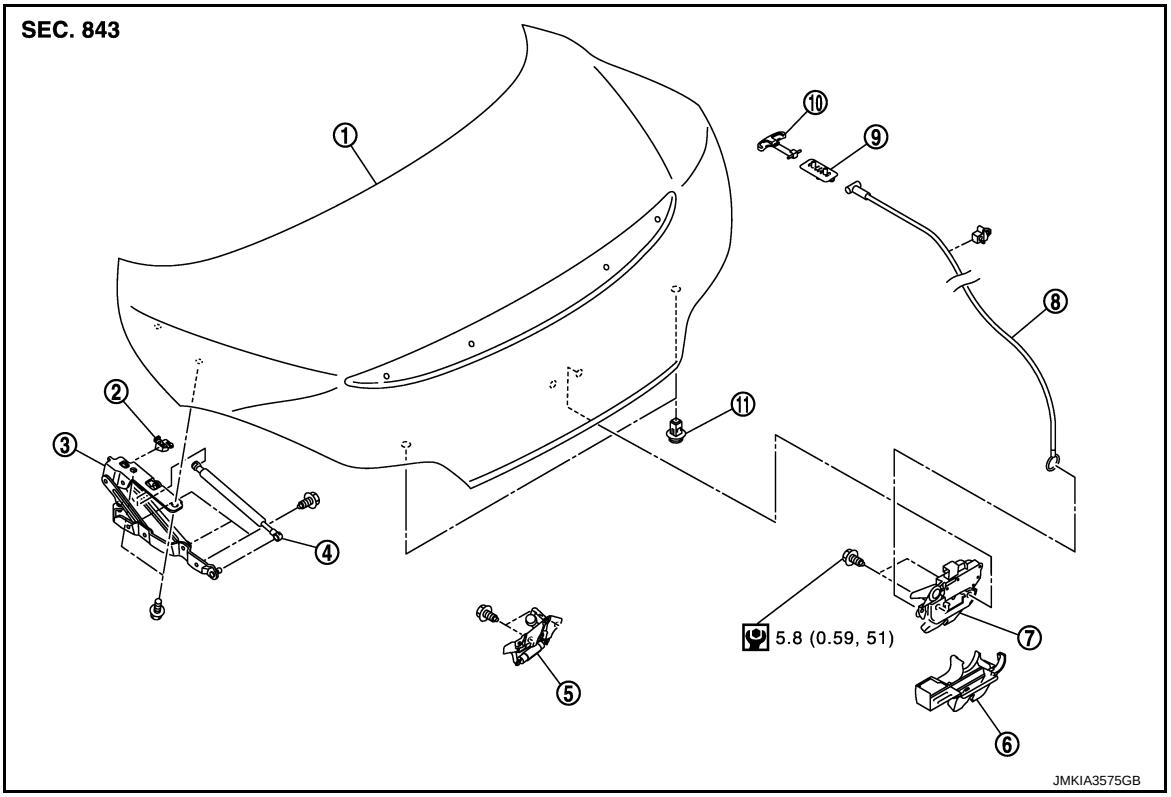

1. Trunk lid assembly
2. Trunk lid hinge stopper
3. Trunk lid hinge
4. Trunk lid stay
5. Trunk lid striker
6. Trunk lid lock cover
7. Trunk lid lock assembly
8. Trunk lid opener cable
9. Trunk lid emergency opener lever holder
10. Trunk lid emergency opener lever
11. Bumper rubber

Refer to GI-4, "Components" for the symbols in the figure.

TRUNK LID LOCK : Removal and Installation

INFOID:0000000008160770

REMOVAL

1. Remove the trunk lid finisher inner. Refer to INT-31, "Removal and Installation".
2. Remove the trunk lid emergency opener lever.
3. Disconnect the trunk lid opener cable.
4. Disconnect the connector from trunk lid lock assembly.
5. Remove the mounting bolts, and remove the trunk lid lock assembly.

INSTALLATION

Install in the reverse order of removal.

NOTE:

- After installing, perform trunk lid fitting adjustment. Refer to DLK-202, "TRUNK LID ASSEMBLY : Adjustment".
- After installing, check the operation.

FUEL FILLER LID OPENER

Exploded View

INFOID:0000000008160771

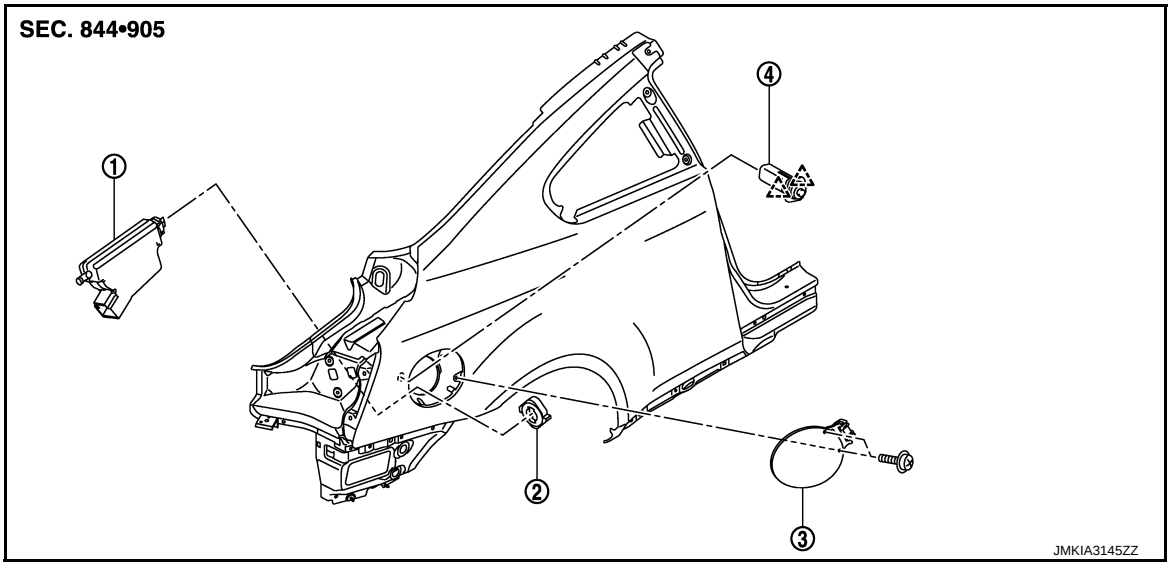

1. Fuel filler lid opener actuator
2. Lock nut
3. Fuel filler lid assembly
4. Lock and cable assembly

: Pawl

Removal and Installation

INFOID:0000000008160772

NOTE:
When fuel filler lid opener actuator (1) is a defective operation, pull the rod to open fuel filler lid.

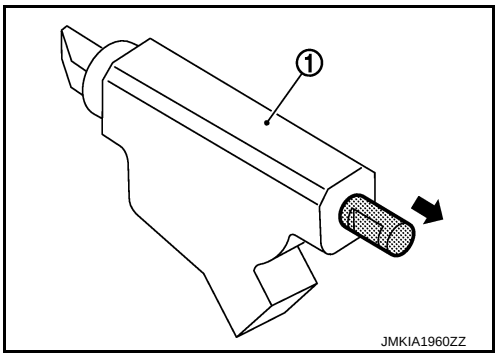

REMOVAL

1. Remove mounting screws, and then remove fuel filler lid.
2. Pull and remove lock & cable assembly forward, while pushing the pawls.
3. Rotate lock nut counterclockwise, and then remove lock nut.
4. Push fuel filler lid opener actuator behind the vehicle, while pushing the pawl.
5. Remove trunk side finisher (RH). Refer to INT-29, "Removal and Installation".
6. Disconnect harness connector and remove fuel filler lid opener actuator.

INSTALLATION

Install in the reverse order of removal.

CAUTION:
After installation, apply the touch-up paint (the body color) onto the head of the mounting screws.

DOOR SWITCH

Removal and Installation

INFOID:0000000008160773

REMOVAL

1. Remove the door switch mounting bolt (A), and then remove door switch (1).

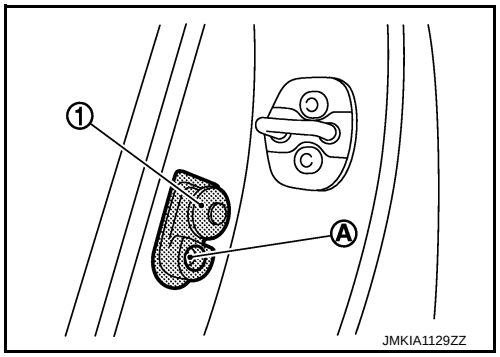

INSTALLATION

Install in the reverse order of removal.

INSIDE KEY ANTENNA

INSTRUMENT CENTER

INSTRUMENT CENTER : Exploded View

INFOID:0000000008160774

Refer to IP-12, "A/T MODELS : Exploded View".

INSTRUMENT CENTER : Removal and Installation

INFOID:0000000008160775

REMOVAL

1. Remove the console finisher. Refer to IP-13, "A/T MODELS : Removal and Installation".
2. Remove the key slot mounting screw (A), and then remove inside key antenna (instrument center) (1).

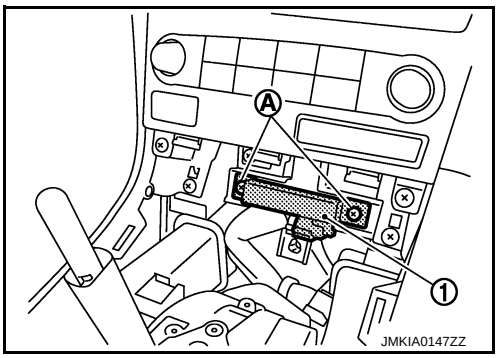

INSTALLATION

Install in the reverse order of removal.

CONSOLE

CONSOLE : Exploded View

INFOID:0000000008160776

Refer to IP-35, "A/T MODELS : Exploded View".

CONSOLE : Removal and Installation

INFOID:0000000008160777

REMOVAL

1. Remove the console ashtray.
2. Remove the console rear finisher (2). Refer to IP-36, "A/T MODELS : Removal and Installation".
3. Remove the inside key antenna mounting screw (A), and then remove inside key antenna (console) (1) from console rear finisher (2).

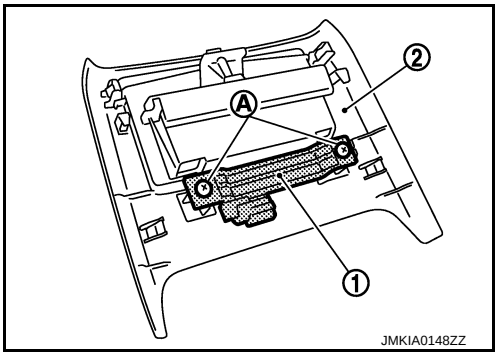

INSTALLATION

Install in the reverse order of removal.

TRUNK ROOM

TRUNK ROOM : Exploded View

INFOID:0000000008160778

Refer to INT-29, "Exploded View".

TRUNK ROOM : Removal and Installation

INFOID:0000000008160779

REMOVAL

1. Remove trunk floor carpet and trunk front finisher. Refer to INT-29, "Removal and Installation".
2. Remove the inside key antenna (trunk room) mounting clips (A), and then remove inside key antenna (trunk room) (1).

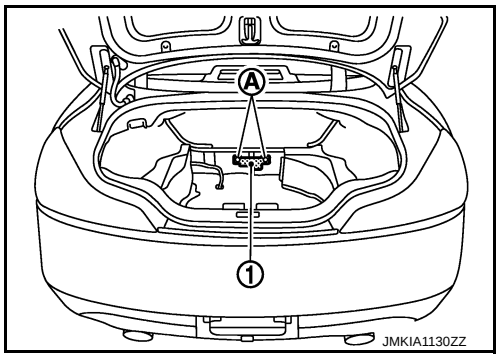

INSTALLATION

Install in the reverse order of removal.

OUTSIDE KEY ANTENNA

DRIVER SIDE

DRIVER SIDE : Exploded View

INFOID:0000000008160780

Refer to DLK-208, "DOOR LOCK : Exploded View".

DRIVER SIDE : Removal and Installation

INFOID:0000000008160781

REMOVAL

Remove the front outside handle LH. Refer to DLK-208, "DOOR LOCK : Removal and Installation".

INSTALLATION

Install in the reverse order of removal.

PASSENGER SIDE

PASSENGER SIDE : Exploded View

INFOID:0000000008160782

Refer to DLK-208, "DOOR LOCK : Exploded View".

PASSENGER SIDE : Removal and Installation

INFOID:0000000008160783

REMOVAL

Remove the front outside handle RH. Refer to DLK-208, "DOOR LOCK : Removal and Installation".

INSTALLATION

Install in the reverse order of removal.

REAR BUMPER

REAR BUMPER : Exploded View

INFOID:0000000008160784

Refer to EXT-18, "Exploded View".

REAR BUMPER : Removal and Installation

INFOID:0000000008160785

REMOVAL

1. Remove the rear bumper. Refer to EXT-19, "Removal and Installation".
2. Remove the outside key antenna (rear bumper) mounting nuts (A), and then remove outside key antenna (rear bumper) (1).

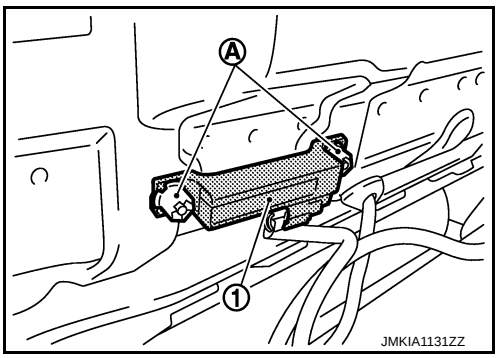

INSTALLATION

Install in the reverse order of removal.

INTELLIGENT KEY WARNING BUZZER

Exploded View

INFOID:0000000008160786

Refer to DLK-195, "Exploded View".

Removal and Installation

INFOID:0000000008160787

REMOVAL

1. Remove the hood seal assembly (side). Refer to DLK-195, "Removal and Installation".
2. Remove the Intelligent Key warning buzzer mounting bolt (A), and then remove the Intelligent Key warning buzzer (1).

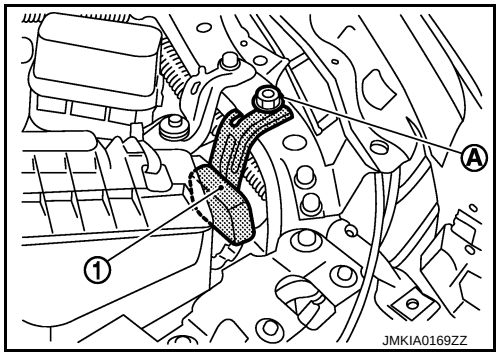

INSTALLATION

Install in the reverse order of removal.

KEY SLOT

Exploded View

INFOID:0000000008160788

Refer to IP-12, "A/T MODELS : Exploded View".

Removal and Installation

INFOID:0000000008160789

REMOVAL

1. Remove the instrument driver lower panel (2). Refer to IP-13, "A/T MODELS : Removal and Installation".
2. Disconnect key slot connector.
3. Remove the key slot mounting screw (A), and then remove key slot (1) from instrument driver lower panel (2).

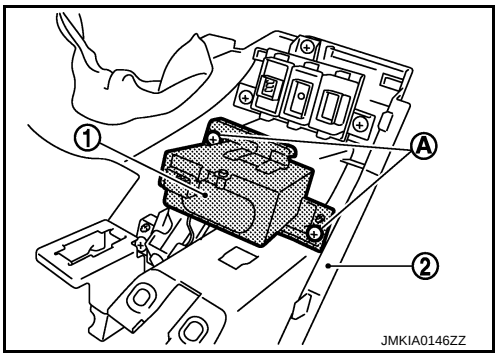

INSTALLATION

Install in the reverse order of removal.

TRUNK LID OPENER REQUEST SWITCH

Exploded View

INFOID:0000000008160790

Refer to EXL-137, "Exploded View".

Removal and Installation

INFOID:0000000008160791

REMOVAL

1. Remove the rear combination lamp LH (1). Refer to EXL-137, "Removal and Installation".
2. Remove the trunk lid opener request switch connector (B).

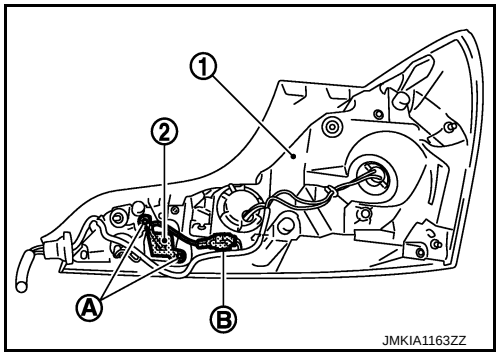

3. Remove the trunk lid opener request switch mounting screw (A), and then remove trunk lid opener request switch (2) from rear combination lamp LH (1).

INSTALLATION

Install in the reverse order of removal.

TRUNK LID OPENER SWITCH

Exploded View

INFOID:0000000008160792

Refer to IP-12, "A/T MODELS : Exploded View".

Removal and Installation

INFOID:0000000008160793

REMOVAL

1. Remove the instrument driver lower panel. Refer to IP-13, "A/T MODELS : Removal and Installation".
2. Remove the trunk lid opener switch (1) from instrument driver lower panel, and then remove pawl (A). Press trunk lid opener switch (1) front side to disengage from instrument driver lower panel.

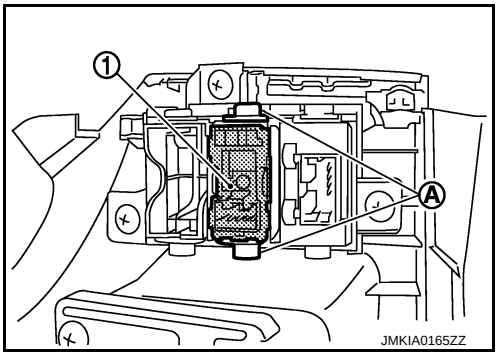

INSTALLATION

Install in the reverse order of removal.

TRUNK LID OPENER CANCEL SWITCH

Exploded View

INFOID:0000000008160794

Refer to IP-12, "A/T MODELS : Exploded View".

Removal and Installation

INFOID:0000000008160795

REMOVAL

1. Remove the instrument assist lower panel. Refer to IP-13, "A/T MODELS : Removal and Installation".
2. Remove the trunk lid opener cancel switch (1) from instrument assist lower panel, and then remove pawl (A). Press trunk lid opener cancel switch (1) back side to disengage from instrument assist lower panel.

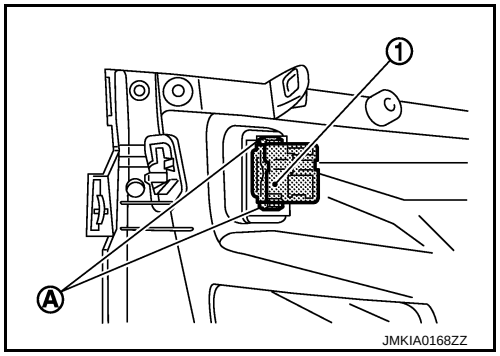

INSTALLATION

Install in the reverse order of removal.

REMOTE KEYLESS ENTRY RECEIVER

Exploded View

INFOID:0000000008160796

Refer to IP-12, "A/T MODELS : Exploded View".

Removal and Installation

INFOID:0000000008160797

REMOVAL

1. Remove the instrument assist lower panel. Refer to IP-13, "A/T MODELS : Removal and Installation".
2. Remove the remote keyless entry receiver mounting bolt (A), and then remove remote keyless entry receiver (1).

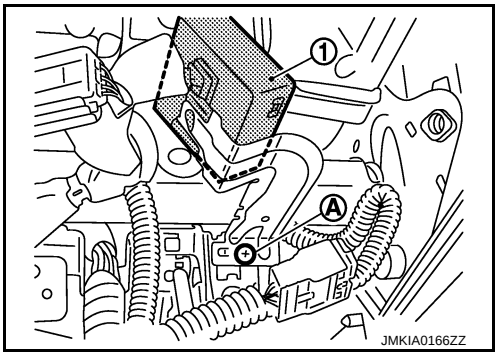

INSTALLATION

Install in the reverse order of removal.